Counting the cost of small components?

Check this list	Yes	No
1 Do you mould thermoplastic components weighing 2g or less?		
2 Are you still using expensive multi-cavity tooling?		
3 Are you still producing sprue and runner waste—often outweighing the moulding?		
4 Do you still get a high component reject rate?		

If you answer yes to ANY of the above questions you need a

RABIT 2/3

At last, an accurate and low cost alternative to multi-cavity moulding. From a single hot feed injection point the RABIT moulds parts weighing 2g or less with no sprue, no runner, no waste... and gives big savings right across the board.

SAVE MATERIAL No sprue or runner waste. By injecting directly into the mould cavity you produce just the parts that count—in nylon, acetal and all the usual engineering thermoplastics.

SAVE TIME Cut cycle times. By cooling only the component not the sprue and runner system your production is linked to the mould cavity—and of course with small moulds "down time" is short. mould changes take only minutes.

SAVE COMPONENTS You will obtain higher yields because single cavity tooling and hot feed injection give controlled cavity fill and eliminate misshapes caused by the unpredictable cooling behaviour of multi-cavity tooling.

SAVE MONEY Pay less to install the RABIT 2/3. Running and maintenance costs are low and single cavity moulds cost far less than multi-impression tooling on larger machines.

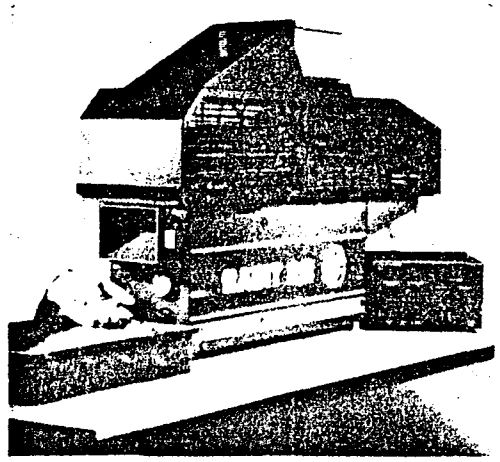

Write today for more information about the RABIT 2/3

Mining & Chemical Products Ltd. 11 Margaret Street. Stone ST15 8EQ. Staffs. Tel: (0785) 815651 Telex: 923455

The MCP Rabit 2/3 Injection Moulding Machine

Manual of Operation, Service and Maintenance Instructions

Introduction

This manual details the information necessary to install, run and maintain the MCP RABIT 2/3 safely. Further, those details which are necessary for mould manufacture, and for finding and solving simple moulding faults, are also included.

For Machine Numbers

M.C.P. EQUIPMENT LTD.
Unit 8 Whitebridge Ind. Est.,
Whitebridge Lane
Stone, Staffs., ST15 8LQ

Tel: (0785) 815651
Tlx: 36596 MCPST G
Fax: 0785 812115

MCP RABIT 2/3

Operations Manual

Contents

Section		Page
1.	**Safety**	5.
2.	**Description of main component parts and specification**	6.
	Drawing 1 - Component parts layout	7.
	Drawing 2 - Control unit front panel	8.
3.	**Installation and Operation**	11.
	Setting a mould in the platens	11.
	Achieving moulding conditions	12.
4.	**Maintenance**	13.
5.	**Materials Handling**	15.
	Material change	15.
	Moulding a new material	15.
	Moulding heat sensitive materials	16.
	Materials performance - suggested settings	18.
	Fault finding chart	19.
6.	**Mould Design**	20.
	Platen capacity drawings	21.

Appendix - Description of the electrical circuitry used in the control panel 22.

Block Schematic Diagram 27.
RABIT 2/3 Wiring Diagram 26.
Control Unit Interconnection Diagram 28.
Air Circuit Diagram 31.

SECTION 1

SAFETY

1.1. Safety Measures

The MCP RABIT 2/3 is constructed to a high standard and is equipped with guards and interlocks as recommended by the B.P.F. The MCP RABIT 2/3 is safe within the terms of the Health and Safety at Work Act 1974.

Side panels, fixed to the base frame by screws, enclose the body of the machine. DO NOT REMOVE SIDE PANELS WITHOUT ISOLATING ELECTRICAL AND COMPRESSED AIR SUPPLY. The main guard covers all working parts of the machine - toggles, platens, plunger and heating unit.

During the normal operation of the machine access to the mould space will be required during setting and occasionally when the machine is running. To ensure total safety the Mechanical Scotch Bar will drop when the Guard is lifted and the Mould is 'Open.' The Guard may only be lifted after the Scotch has engaged to prevent closure of the mould. The interlock between Guard and Scotch ensures this situation and permits one other mode of use of the Guard:

The Guard may also be opened with the Moulds Closed for mould settings or adjustment of the back-nuts on the Fixed Platen, but, observe the label on the machine:

WARNING: DO NOT OPERATE SAFETY GUARD WITH MOULD CLOSED UNLESS AIR SUPPLY IS ISOLATED SEE MANUAL FOR DETAILS.

The procedure, if access to the machine is required when the Moulds are Closed, is as follows:-

Select a long cycle, say 20 seconds.
Close moulds fully.
Disconnect air supply.
Open Guard and carry out setting.
Close Guard.
Reconnect air supply.

The reason for this procedure is that re-closing the Safety Guard with the Air 'ON' causes the full mould opening force to be applied to the Scotch and this produces a very high load on the rubber mounts of the Main Casting. Operating the Guard incorrectly can cause damage!

Access to the machine is made possible by lifting the main guard about its rear hinge into the 'open' position. Safety interlocks then operate as follows:

1.1.1. A limit switch at the front of the guard is released and the contacts part, thus isolating the mould close solenoid from the control circuit.

1.1.2. A mechanical scotch falls under gravity to engage the thrust plate and prevent mould movement.

1.1.3. A cam fitted to the guard depresses an air valve roller cutting off the incoming compressed air and venting the system.

1.1.4. The spool of the air valve 1.13. depresses a second limit switch and, acting against its spring, parts the contacts providing a second point of isolation of the mould close solenoid and also cancellation of the logic signal.

1.1.5. The stop button on the front of the machine will cancel all signals from the logic system of the control unit, de-energize solenoids, and remain locked down until released.

1.2. Safety Checklist

1.2.1 DO - check operation of switches, air valve, and mechanical scotch, daily.

1.2.2. DO - repair any damage to electrical insulation immediately. The heating bands work from 240V supply.

1.2.3. DO - mount your MCP RABIT 2/3 on a solid, clean and dry bench. Movement along or across the bench during operations can be prevented by securing at the front clamp.

1.2.4. DO - treat moulding materials with respect, some can be dangerous if overheated so always check recommended temperatures and information supplied by manufacturer.

1.2.5. DO - check with raw material suppliers for any pre-treatment of materials, e.g. drying.

1.2.6. DO - check the compatibility of fresh material when changes or additions are necessary.

1.2.7. DO - ensure that all personnel understand the machine.

1.2.8. DON'T - operate the machine without covers or guards securely in position.

1.2.9. DON'T - work at the machine, or carry out maintenance without first disconnecting both air and electrical supplies.

1.2.10. DON'T - underestimate the speed and power of the machine - it could make you careless in handling it.

1.2.11. DON'T - work on the band heaters or the supply to them without isolating the control unit from the electrical supply.

Section 2

DESCRIPTION OF MAIN COMPONENT PARTS AND SPECIFICATION.

2.1. Component Parts (See Dwg.1)

The MCP RABIT 2/3 is designed to mould most plastics materials and will produce accurate, consistant, flash free mouldings on a fast cycle.

For convenience the MCP RABIT 2/3 can be described by detailing the nine major sub assemblies, their function, and interaction. A numbered diagram is given opposite showing the major component parts.

2.1.1 No. 1) **Tie bars and Platens** - two tie bars transmit movement of the thrust plate to the moving platen and so open and close the mould halves.

2.1.2. No. 2) **Toggles** - the toggle assembly moves by action of the main cylinder rod which thrusts the main cam into a horizontal position causing the toggles to extend and push the thrust plate.

2.1.3. No. 3) **Main Cam** - is pivoted to act as part of the toggles and also to prevent premature movement of the injection carriage which is held stationary until the toggles are fully locked.

2.1.4. No. 4) **Injection Carriage** - this slides on the tie bars and is inhibited from its injection stroke, until the toggles are locked, by the action of the main cam and by roller engagement in the cam slot. The injection carriage is powered by its link with the main cylinder.

2.1.5. No. 5) **Main Cylinder** - this provides thrust for both the toggle and injection carriage. The cylinder rod is attached to the main cam whilst the cylinder body is retained by a fork connection to the injection carriage. The rod moves first, closing the mould by toggle/tie bars movement. The cylinder body, and therefore the carriage are retained by the roller in the cam slot and cannot move until the toggles are closed. When the main cam is at the end of its movement i.e. "horizontal" the roller is able to travel along the cam slot and so the cylinder body reacts against the rod, now stationary, and produces the injection stroke. Plunger return and mould open are a reverse of this movement.

2.1.6 No. 6) **Main Frame** - this unit ties together all the other assemblies and contains all the forces generated. The main frame also supports the plasticising unit.

2.1.7. No. 7) **Heating Chamber** - comprises four components:-

a) The chamber, which is a pressure vessel and contains the heated plastic.

b) The spreader, which receives the input plastic and heats it to a melt of correct temperature and viscosity.

c) The sleeve, which is a hardened component. The sleeve may be changed to accommodate different shot weight and pressure.

d) The plunger, is also a hardened component and similarly may be changed to suit different shot weights and pressures.

2.1.8. No. 8) **Base Frame** - this is a support assembly which carries no loads other than the weight of the machine and its controls.

2.1.9. No. 9) **Safety Guards** - the MCP RABIT 2/3 is equipped with safety guards and interlocks to B.P.F. recommendations. These are more fully explained in section 1.

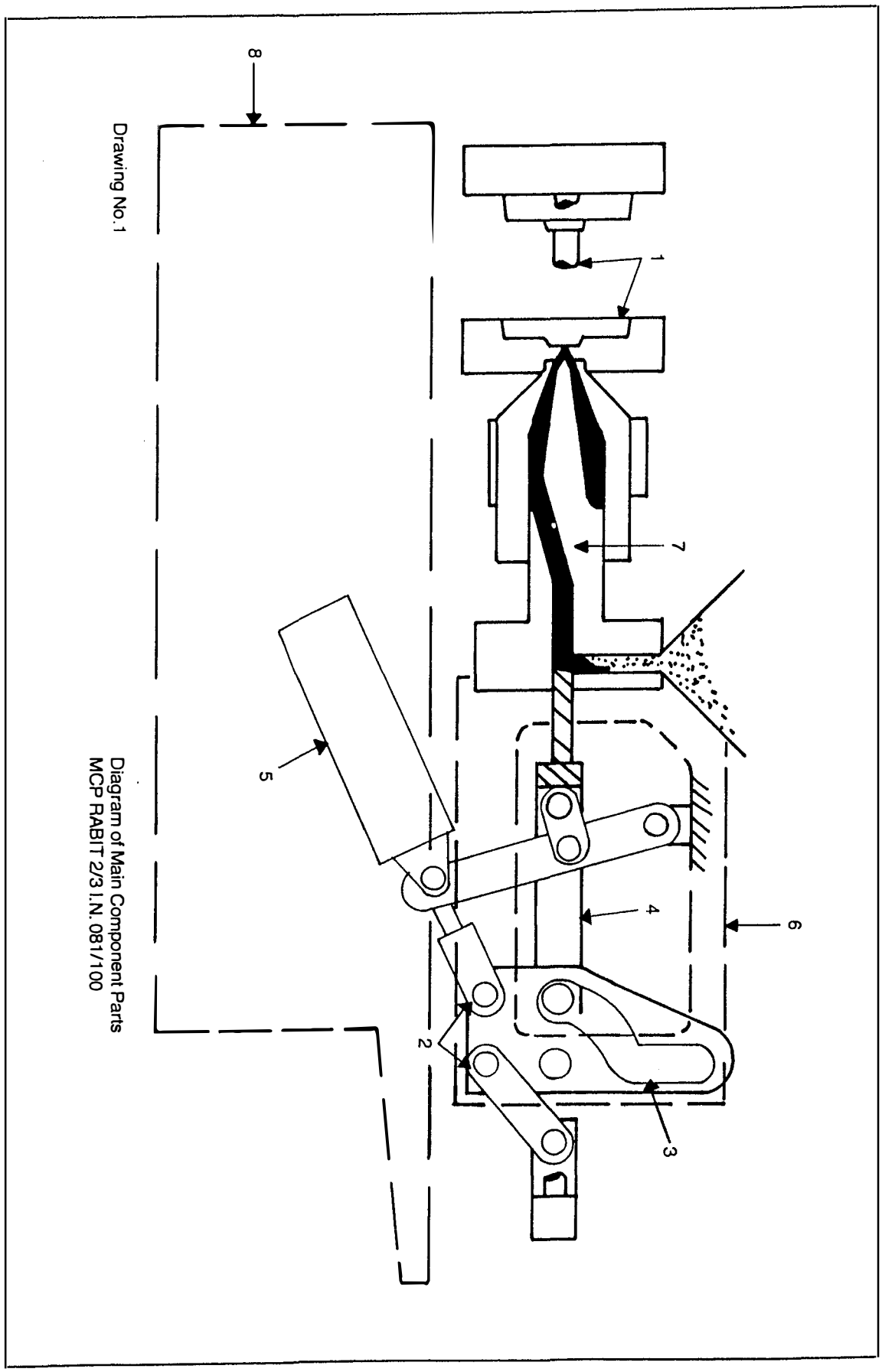

Drawing No.1

Diagram of Main Component Parts
MCP RABIT 2/3 I.N. 081/100

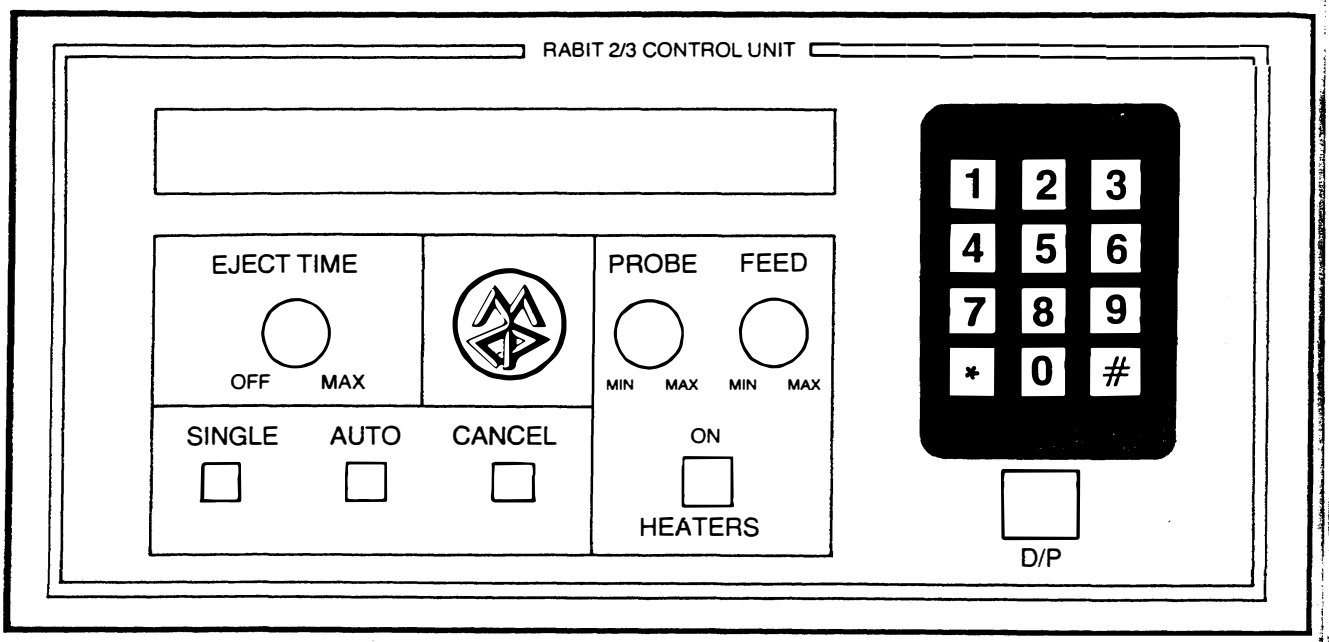
RABIT 2/3 CONTROL UNIT
EJECT TIME
OFF
MAX
PROBE
FEED
MIN
MAX
MIN
MAX
SINGLE
AUTO
CANCEL
ON
HEATERS
1
2
3
4
5
6
7
8
9
*
0
#
D/P

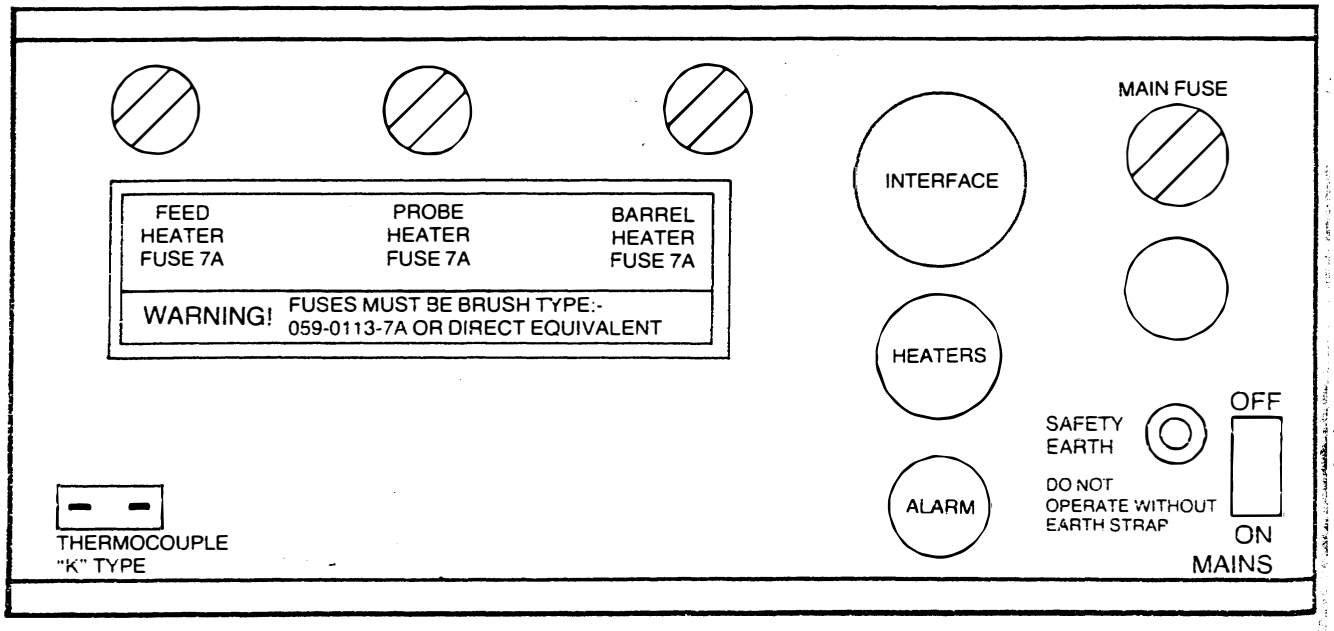
FEED HEATER FUSE 7A
PROBE HEATER FUSE 7A
BARREL HEATER FUSE 7A
WARNING!
FUSES MUST BE BRUSH TYPE:-
059-0113-7A OR DIRECT EQUIVALENT
INTERFACE
MAIN FUSE
HEATERS
ALARM
SAFETY EARTH
DO NOT OPERATE WITHOUT EARTH STRAP
OFF
ON
MAINS
THERMOCOUPLE "K" TYPE

The Control Unit (Drawing 2)

The microprocessor control unit controls the three heaters and also the solenoids controlling the air flow and sequencing.

Software Overflow

The software used to drive the controller is designed to be as fully user friendly and interactive as possible within certain design considerations.

All user interation is by a 12 way keypad and by means of potentiometer control knobs and push button controls, there is a 2 line x 32 character display.

The approach used in the software is to make the system menu driver i.e. the ability to alter small sections of the information rather than every line having to follow a set procedure encompassing all of the parameters).

The machine operation is totally transparent to the setting and diagnostic routines of the controller. At any time during the operation of the machine any parameter can be altered without halting the machine.

2.3 INITIAL SET-UP PROCEDURE

On power up the initial menu will be displayed on the L.C.D. This shows that the machine is now ready for data to be entered and cycling to commence.

Option '1' (Batch)

Option '1' Batch can now be entered, this will enable a pre-determined batch no. to be entered into the machine, after completion of this batch the machine will stop and sound the alarm.

Option '2' (Set up)

Option '2' Set Up can now be entered, this will enable entry to the heater and timer parameters after setting these parameters it is now possible to run the machine. This is achieved by pressing either the single or auto cycle buttons on the control unit.

Option '3' (Continued)

Option '3' continued can now be entered, this will display the set temperature, the actual temperature, cycle times (inject and eject times) Probe % and Feed %.

Heaters

The heaters are switched on by pressing the "heaters on" button, if the machine is not yet up to temp. the display will show O***WARM UP O***. This message will be continually shown until the barrel is up to temp. then the message O***O.K.O*** will be displayed.

2.2.8 Normal utilisation of the machine

All the systems parameters are stored in a non-volatile memory. This means that all heater settings, injection times, and batch numbers are retained in the computer. On power up at the start of a work session the machine will only need the "heater on" button to be pressed to start the warm up procedure.

When the machine is up to temp. moulding can be commenced by closing the guard and pressing either the single or auto cycle buttons.

When the machine is cycling it is possible to re-enter the set up parameter by first pressing the * key which will then display the "intial menu". NOTE: The machine will continue to cycle during this procedure, but it is important to note that while in the set up procedure the diagnostic routines involved within the heaters and thermocouple are not used, it is therefore advisable to return to the normal running (continue 3) mode as soon as any set up is completed.

In addition, whilst the machine is being set up, or during the heat up and cool down periods it is possible to have single cycle, auto cycle and cancel functions from the controlpanel, when the machine is entered into the continue mode from the initial menu the machine will show the normal running display with the exception that the top line will now show M/C HALTED, now by pressing either the SINGLE or AUTO button the machine will cycle regardless of set temperature. The cycle may be interrupted at any time by pressing the CANCEL button.

2.2.9. Menu Options

1. INITIAL MENU — BATCH = 1 SET UP = 2 CONTINUE = 3

   a. RUN — This enters menu 2
   b. SET UP — This enters menu 3
   c. CONTINUE — This option re-enters the nonnal running routine of the machine without altering any of the system variables.

2. BATCH MENU — DISPLAY SET QUIT
   1 2 ::

   a. DISPLAY — This option enters the routine that displays remaining batch quantity. The ENTER key will return to the INITIAL menu.
   b. SET — This option allows the batch quantity to be set. This can be in the range of 0 - 999999. The :: key will re-enter the previously set batch size.
   c. QUIT — This option re-enters the INITIAL menu.

3. SET UP MENU — TEMP-TIME-QUIT
   1 2 ::

   a. TEMP — This option enters menu 4
   b. TIME — This option enters menu 5
   c. QUIT — This option returns to the INITIAL menu

HEATER MENU DISPLAY-SET-QUIT
1 2 ::

a. DISPLAY This option displays the preset values for the three heaters. The barrel heater is displayed as the actual set temperature, and the Nozzle and Feed heaters as a %. The enter key returns back to the HEATER menu after viewing the settings.

b. SET This option enters the routine for setting the heater values. Barrel Heater temp = 3 digit value (103 - 345)

c. QUIT This option returns to the INITIAL menu.

5. TIMER MENU DISPLAY-SET-QUIT
1 2 ::

a. DISPLAY This option displays the values stored in the inject and Eject timer. If component clear is selected the eject time display will be replaced by COMPONENT CLEAR. The ENTER key then returns to the TIMER menu.

b. SET This option enters the routine for setting the timer values. The injection time in the range 00.0 - 99.9 seconds may be entered. The enter key then will show whether the eject timer or the component clear device is used.

TIMED This option allows the machine to have a preset delay to allow for component clearance from the die. Timing for this delay is initialised on the injection ram being fully retracted. This option is enabled by the Eject Time control being not in the off position.

CLEAR This option allows the machine to operate at maximum speed by the connection of a component clear sensor. This means that as soon as the mould has fully opened, and the sensor has noted that the moulding has cleared the die recycling of the machine can occur without further delay.
This option is enabled by the Eject Time control being in the off position.

6. COMPONENT CLEAR MENU COMPONENT TYPE - LIGHT DARK
SELECT TYPE - 1 2

a. LIGHT This option is used if the component is made of a light coloured material. In this instance the photoelectric cell is set to be in the unmade condition. So that as the component passes the light beam the output is made.

b. DARK This option is used if the component is made of a dark coloured material. In this instance the photoelectric cell is set to be in the made condition. So that as the component passes the light beam the output is not made.

QUIT This will return to the TIMER menu.

7. GENERAL
NOTE After entering any variable information this information will be accepted by the computer by the use of the ENTER (:) key. If any other key is pressed this data will be rejected and the operator will be prompted to re-enter data. This cancel function is only available after the complete number is entered. The entry MUST be the full length. i.e Including all leading zeros (eg 09.5).

FAULT DIAGNOSTICS

The fault diagnostics capability of the controller are running all the time monitoring the necessary functions during normal running. These are:

1. T/C Fault
2. Keypad Fault
3. Over temp
4. Under temp
5. Too high
6. Too low
7. Fuse blown
8. Heater Fault
9. No control voltage
10. No air pressure (Optional)
11. Emergency stop

1. Thermocouple Fault (T/C FAULT !!)

This will occur if the thermocouple becomes open circuit at any part of it's circuit. The machine will stop cycling and the heaters will shut down. The alarm output will be activated. To regain control of the machine the * key should be pressed.

2. Keypad Fault (KEYPAD FAULT)

Every time a keypad entry is made the computer checks to see if it is a valid character i.e. certain faults within the keypad may return invalid characters.

If such a character is detected then on the top line of the L.C.D. the message 'KEYPAD FAULT' will be displayed.

3. Over Temp (OVER ***)

This message will be displayed if the measured temperature is more than 10°C above the set temperature.

4. Under Temp (TEMP ***)

This message will be displayed if the measured temperature is more than 10°C below the set temperature. This may be an indication of:

a) Mechanically loose T/C
b) Heater Fault

5. **Too High** (TOO HIGH)

This message will be displayed if the temperature being set for the barrel heater is above its normal working band. The entered value will be cleared and then the computer will prompt a re-entry.

6. **Too Low** (TOO LOW)

This message will be displayed if the temperature being set for the barrel heater is below the normal working band. The entered value will be cleared and then the computer will prompt a re-entry.

7. **No Voltage** (FUSE BLOWN)

This message will be displayed if when a heater is turned on there is no voltage present on the fused side. Control can be recovered by pressing the * Key.

8. **Low Current** (HEATER FAULT)

This message will be displayed if and when a heater is turned on and there is voltage present on the fused side, but there is no current, or a depleted current, been drawn by the heater.

9. **No Control Voltage** (NO CONTROL VOLTS)

This message will be displayed when the machine is set to cycle and the computer detects that the +12 volts control voltage is absent.

10. **No Air Pressure (Optional)** (NO AIR PRESSURE)

This message will be displayed when the machine is set to cycle and the computer detects that the air pressure switch is not made (if switch is fitted).

11. **Emergency Stop Out** (EMERGENCY STOP)

The message will be displayed if the emergency stop circuit is broken.

FAULTS:- 1.7.8.9.10.11. will halt the machine operation and leave the message on the display. The ALARM OUTPUT will be energised so as to draw attention to the machine.

Control can be regained from this situation by pressing the ENTER KEY (#). This will return control to the INITIAL MENU and turn off the STOPPAGE OUTPUT.

2.3

Specification	Standard Plunger	Low Pressure	High Pressure
Plunger Diameter	12mm (0.47")	15mm (0.59")	10mm (0.39")
Volume*	2cm³ (0.14"cu)	2.5cm³ (0.15"cu)	1.5cm³(0.09"cu)
Shot Weight* (Polystyrene)	2g (0.07oz)	2.5g (0.09oz)	1.5g (0.05oz)
Pressure	900kg/cm² (12,780psi)	600kg/cm (8,520psi)	1400kg/cm (19,88(
Clamp	3 tonnes (3ton)		
Mould Size	80mm ∅ (3.15")		
Between Bars	100mm (3.94")		
Platen Stroke	50mm (1.97")		
Mould Thickness	65mm (2.56")		
Electrical Supply	220/240V or 110/120V 50-60Hz		
Wattage	1.45Kw		
Air Pressure (max)	7.5kg/cm² (110psi)		
Air Pressure (min)	2.0kg/cm² (30psi)		
Air Consumption	226L/min 4 sec cycle (8 cu.ft./min.)		
Dry Cycle Time	1 sec.		
Weight	74kg (163lbs)		
Dimensions	L 111cm (39.5") H 61.5cm (24.25") W 24cm (9.5")		
Hopper Capacity	3kg (6.5lbs) approx.		

Note: All moulds must be 80mm ∅ x 65mm thick

* Dependant upon material and granule shape

SECTION 3

INSTALLATION AND OPERATION

3.1 Machine Mounting

The MCP RABIT 2/3 should be placed on a clean, dry and level surface. The machine(s) may be clamped to the front edge of the bench by a single screw through the flange at the end of the machine base. This flange can be slotted so that easy removal is possible. Access to the platens is required for mould fitting but machines may be placed quite close together and maintenance or mould fitting carried out by removal of the machine to a fitting and test bench.

In this case plug-in water and air fittings should be provided and the control unit located so that the extension lead will reach both "run" and "test" positions.

3.2 Compressed Air Supply

The RABIT 2/3 requires a supply of compressed air at 100 — 110 psi, (7.1 — 7.8 bar), and will use approximately 226L/min, (8 cu.ft/min), of free air per minute at 900 cycles per hour.

The supply of air must be DRY, FILTERED, and a LUBRICATOR must be fitted. An air supply which is damp or is not suitably lubricated will damage valves and cylinder.

THE GUARANTEE SUPPLIED WITH THE MCP RABIT 2/3 IS VOID UNLESS DRY, FILTERED, LUBRICATED AIR IS USED.

3.3 Electricity Supply

The machine operates on 240V 50/60 Hz cycle (110V to order) AC single phase supply and may be powered from a domestic 13A, three pin socket. The control unit has a built in fuse but an additional fuse, such as is fitted to a standard 13A plug is desirable.

3.4 Control Unit

The control unit can be located adjacent to the machine or it may be sited away from the machine e.g. on a shelf above. **N.B. Always fit the earth strap between machine and control unit and check to ensure that all earth connections on the main frame are tight.**

3.5 Water Supply

A clean, preferable rust inhibited, water supply is required, 15-20 psi and 1.5G/min, (1-1.3 bar and 7.0L/min) is sufficient. Mould temperature controllers may be required on machines running Nylon or engineering thermoplastics.

3.6 Setting a Mould in the Platens

Moulds should be specifically designed for use on the MCP RABIT 2/3. Design parameters, diameter, height, "gate form" etc are given on the platen capacity drawing in section 6.

N.B. a) Care should be taken not to damage the spreader tip during the following operations.
b) The tip should protrude 13mm from the face of the barrel.
c) Ensure that the "gate form" of the mould is as shown on the platen capacity drawing.

3.6.1 Remove the ejector plate, moving platen and fixed platen from the machine.

Note: Water pipes may be removed from the quick release couplings by first pressing down on the collet with a screwdriver and then withdrawing the tube.

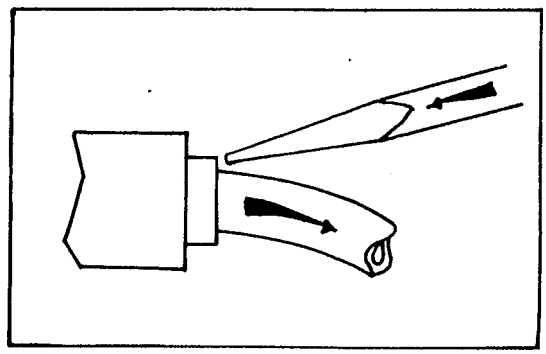

3.6.2. Suitably position the fixed half of the mould into the fixed platen and secure using two 6mm cap head screws. See fig. 1.

1

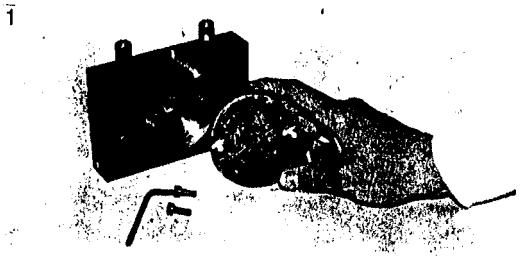

3.6.3. Locate the moving half of the mould in the moving platen and loosely secure with two 6mm cap head screws.

3.6.4. Slide the fixed platen/mould assembly onto the tie bars. Carefully slide the assembly onto the end of the barrel ensuring that the spreader tip locates into the gate hole.

N.B. Refer to platen capacity drawing to check this location!

3.6.5. Slide the moving platen/mould assembly onto the tie bars and pull the fixed platen/mould assembly to meet the moving platen/mould assembly and so align the mould halves. See fig. 2

2

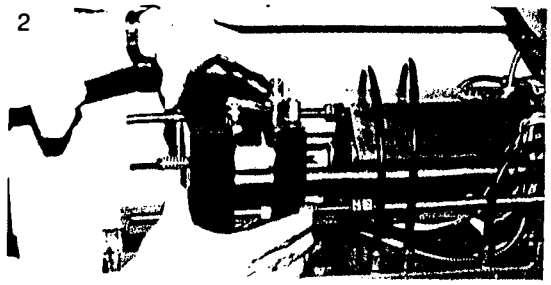

3.6.6. Secure the mould into the moving platen by fully tightening the 6mm cap head screws.

3.6.7. Remove the moving platen assembly.

3.6.8. Again slide the fixed platen assembly onto the end of the barrel and secure using 12mm nuts provided. See Fig. 3

3

Warning: The back nuts behind this platen have been set to give correct alignment of the fixed platen to the barrel and if released must be reset as follows:-
a) With the mould fitted correctly and the barrel at approximately 200° C back off the nuts behind the platen and close the mould on full clamp on a long cycle, opening the guard or cutting off the air supply to leave platens closed. N.B. Open the guard according to procedure given in Section 1 - SAFETY.
b) Wind back nuts up to platen and lock them.

3.6.9. Replace the moving platen assembly and secure using the 12mm cap head screws supplied. See fig.4

4

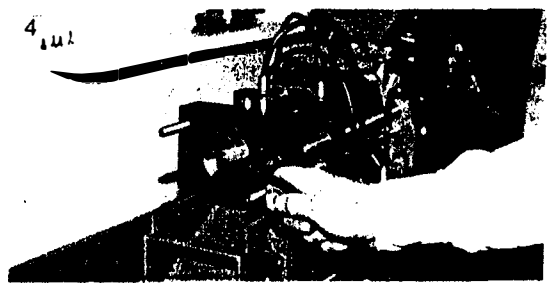

3.6.10 Fit the water cooling pipes to the fixed platen and moving mould half and water test.

3.6.11. Loosely screw a 12mm nut onto each ejector bar, then position the ejector plate onto the ejector bars to give optimum ejection and air blast, fix in position with the two remaining 12mm nuts. See fig. 5

5

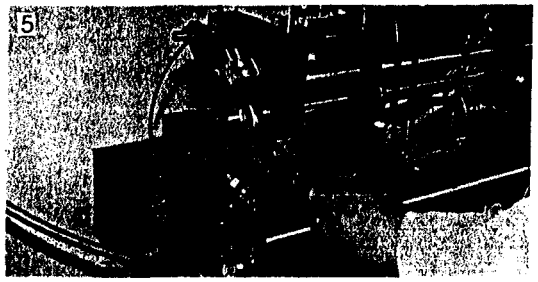

3.6.12. Fix the air blast tube to the mould or platen.

3.6.13. The machine is now set up with the moulds aligned and is ready for use.

3.7 Achieving Moulding Conditions

3.7.1 Set the temperature and controls for probe and feed heating according to the material moulding chart or settings used on previous run. (a suggested Record Card is at the rear of the Section)

3.7.2. Ensure that the temperature indicated has reached setting level and is compatible with the material in the hopper.
Set the timer to cover a longer period than expected to be necessary.

3.7.3. Open the hopper feed and select single cycle with a low pressure on the injection, say, 50 psi. NB.It is not possible to mould below 35 psi. on the gauge at the front of the RABIT as this gives no control on injection pressure.

3.7.4. Observe the position of the injection carriage and, when the mould opens, check the condition of the mould.

3.7.5. If a moulding or part of a moulding has been produced ensure that all of it is ejected or removed before re-closing the mould again.

3.7.6. Increase the injection pressure if, after three or four attempts, a full moulding is not produced.

3.7.7. When a full moulding is produced the cycle time may be lowered and an attempt made to lower the material temperature in order to further reduce cycle time.

3.8 Hints to better mouldings

3.8.1 The RABIT 2/3 runs better if it runs faster:
This is becuase the hot-tip design of the gate into the moulding is less sensitive to setting temperature if the material 'dwells' there for less time.

3.8.2. Better mouldings are made at the lowest temperature compatible with good strength and appearance of the moulding.

3.8.3. The only control which affects the machine immediately upon adjustment is the injection pressure, all other adjustments take time to affect the moulding condition.

Do not adjust more than one at a time and watch the effect of that adjustment for at least ten mouldings to establish a 'trend' before re-trimming or further alteration of the conditions.

3.8.4. If there is some persistant problem with, for example, ejection from the mould, stop the machine, correct the fault and then continue moulding. The RABIT is like any other automatic machine, it is worthwhile getting things right at the start of a run, not continually attending to a problem during the run.

3.8.5. If the "nozzle" or gate dribbles between cycles try lowering the probe temperature slightly and/or raising the feed temperature.

3.8.6. If problems are experienced getting the component to stay on the moving half of the mould so that ejection can take place, try reducing the injection pressure. If, however, the reduction only results in 'short' mouldings an Undercut may be required in the moving half form of the mould to promote retention.

Never work on a 'knife-edge' of control, ensure that parameters in which good mouldings are obtainable are as wide as possible. This will mean that changes outside the machine such as ambient temperature, fresh material, water temperature, air supply pressure etc will not have such a marked affect upon the continuation of a reliable rate of production of good mouldings.
See also Chart "Suggested Machine Settings."

SECTION 4

MAINTENANCE

The MCP RABIT 2/3 is designed for fast operation. Features are built into the machine which are appropriate to its speed and simplicity and yet avoid complicated maintenance procedures.

Remember, the compressed air supply must be filtered, and an oil drip lubricator must be fitted to ensure adequate lubrication of valves and cylinders.

4.1 Every 24 hours or 25000 cycles

4.1.1. Tie Bars — Wipe and apply light oil.
Note: After the initial 150 hours of 'running in' the bushes in the fixed platen may be left dry.

4.1.2. Mould — Clear any trapped flash or, "strings." Apply light oil to moving parts - wipe clean. Check water and air lines for leaks.

4.1.3. Guards — Check security of all panels and fixing screws. Check the main guard for action and effectiveness of air safety - valve, switch and safety scotch.

4.2. Occasional Maintenance

It may be found necessary from time to time to stop the machine and gain access for cleaning or to carry out simple parts replacement.

4.3. Heating Chamber - Removal

Occasionally it will be necessary to remove and clean the heating unit. This may be done whilst the unit is hot, which will greatly assist the separation of the spreader and barrel. Alternatively the unit may be removed when cold, in which case heat may have to be applied to assist unscrewing.

Proceed as follows:-

4.3.1. Turn hopper feed "off" and run until feed and sleeve are completely empty.

4.3.2. Remove the spring clip which retains the plunger and slide the plunger forward into the barrel sleeve.

4.3.3. Switch off the electricity supply and disconnect heaters and thermocouple.

4.3.4. Release the nose of the chamber from the platen by unscrewing the 12mm nuts on the platen face and sliding it forward. **Beware of trapped pressure if the chamber is hot.**

4.3.5. Undo the 10mm screw beneath the feed area on the side of the main casting.

4.3.6. Using a 4mm diameter rod drive out the cotter pin previously retained by the 10 mm screw.

4.3.7. The chamber is now loose and may be removed.

4.3.8. **Replacing (or changing plunger/sleeve)**
1) Remove the heating chamber as detailed above.
2) Remove 5 off 4mm counter sunk cap head screws from rear of spreader.
3) Remove sleeve from spreader.
4) Replace with new sleeve after first checking that the sealing face in the spreader is clear of plastic.
5) Tighten up the 5 x 4 mm screws and replace barrel/spreader unit in machine.

4.4. Changing Heating Elements

Three heating elements are used on the RABIT to heat plastics materials to the required temperature for moulding. Elements may require replacement after a period of time and the procedure for replacing them is as follows:
Note: remember to refer to the wiring diagram for pin numbers in plugs.

Remove the barrel/spreader assembly from the machine as directed in: Heating Chamber Removal. The barrel/spreader assembly contains the three heater elements.

4.5. Main Heater

This is a band type element and is fastened around the barrel.

4.5.1. Remove the thermocouple bayonet fitting.
4.5.2. Loosen the screws which fasten the band around the barrel.
4.5.3. Slide the heater from the barrel.
4.5.4. Remove the two pins from the plug using the tool supplied.

Fitting a replacement heater band is a reverse of the above procedure.

4.6 Feed Heater

The feed heater is the smaller of the two band heaters fastened around the barrel/spreader assembly.

4.6.1. Remove the fixing screws which fasten the band around the barrel.
4.6.2. Remove the cover from the spreader.
4.6.3. "Spring" the heater apart and remove.
4.6.4. Remove the two pins from the plug using the tool provided.

Fitting a replacement heater band is a reverse of the above procedure. Care should be taken that wires from the probe heater are not trapped when replacing the band.

4.7. Probe Heater

Heat is supplied to the probe via a cartridge heater. Access can be gained to the cartridge by removing the feed and main heaters as directed in points 1) to 3) above.

4.7.1. Following removal of the main and feed heaters withdraw the cartridge heater from the spreader.
4.7.2. Remove the two pins from the plug using the tool provided.
4.7.3. Coat the cartridge heater with a high temperature grease such as Copperslip, Guardian, Molycote etc to prevent seizure.
4.7.4. Insert the new cartridge making sure that it is pushed all the way to the bottom of the hole.
4.7.5. Replace the main and feed heaters.

4.8. Changing the Thermocouple

The thermocouple is of K type. A bayonet fitting secures the thermocouple to the barrel.

To remove the existing thermocouple first disconnect the bayonet fitting and then remove from the machine and unplug from the control unit. A new thermocouple may now be fitted.

4.9. Changing Solenoid Valves

Electrical power and air supply must be disconnected before attempting to replace solenoid valves. Access to and replacement of valves can be carried out as follows:

4.9.1. Remove side panels from the machine.
4.9.2. Remove the air supply and connections at each end of the main cylinder.
4.9.3. Detach the valve mounting plate by taking out the two 4mm fixing screws.
4.9.4. Mark the electrical connectors on the solenoid to ensure correct machine operation and sequencing when the assembly is re-fitted. Remove connectors.
4.9.5. Remove the solenoid valves from the base plate and re-new the required valve, taking care not to leave any loose PTFE tape that may foul the spool of the valve.

Re-assembly may be completed by reversing the above procedure.

SECTION 5

MATERIAL HANDLING

5.1. Material Change

During prolonged trials of many materials, the machine has been found to change from one material and or colour, to another, with little difficulty but, it is a plunger machine and so some transition stage when changing is inevitable, so follow these general rules:-

5.1.1. Do not mix within the barrel, a thermally sensitive material with another requiring an appreciably higher temperature (e.g. Acetal and Nylon). Always use an intermediate material such as Polypropylene which will tolerate the higher temperature and yet flow at the lower temperature.

5.1.2. When the change appears complete, some small traces of the previous colour or material will show and these traces arise from material in the cone which is lodged at the back of the stationary platen. Therefore, release the two 12mm nuts which hold the platen to the chamber nose (beware of residual pressure which may cause material to burst from the joint faces) and bring it forward so that the point of the spreader may be cleaned and the cooled cone at the back of the platen may be removed.

Do not damage the spreader point!

5.1.3. Changing the material **before** changing the mould will save doing procedure 2 twice.

5.1.4. If you decide to 'purge' rather than 'run' the material change through the machine, the best method is to remove completely the **fixed half** of the mould and run at a fast cycle until the material looks good, then carry out the mould change and procedure 2.

5.2. Establishing the Mouldability of a New Material

When requiring to assess the machines ability to mould a material which is unfamiliar, believed unstable or known to be 'dangerous if overheated,' it is vital to establish temperature criteria before attempting to mould and to check compatibility of the material in the barrel with the new material and the operating temperature of both. The method which produces the best data and **is the safest** is as follows:-

5.2.1. Remove both platens and mould so that the barrel end is open.

5.2.2. Short-circuit the water supply to platen and mould by cross-linking the pipes and closing the valves. This permits water to be fed around the hopper throat.

5.2.3. Set temperature to those recommended by the material supplier or those known to be relevant to a similar material already documented for the RABIT.

5.2.4. Close machine guard, open the hopper throat shutter and put the machine cycle timer to a figure **below** the expected cycle for the moulding to be produced.

5.2.5. Now cycle once and observe any movement of material if the barrel is already full or cycle until material emerges if the barrel was empty.

5.2.6. If the 'new' material emerges from the barrel end in a satisfactory condition switch to Fully Auto and run the material through for about 10 minutes. This will check that the plasticising rate is more than adequate for the moulding rate.

5.2.7. If the previous test yields good results without any tendency for the feed to overpack, material to degrade or show signs of temperature loss then the next stage will be to establish the tolerance of the material to the temperature environment existing in the barrel.

5.2.8. Stop the machine with the heat on for one minute, and recycle to check the materials condition. If found satisfactory run for one minute then stop for five minutes with the heat on. Run for a further minute to check the materials condition.

5.2.9. If this test is satisfactory you now know that the material is safe and useable even if left in the barrel for up to five minutes.

This method establishes the parameters for temperature input and temperature tolerance in the material. Now when moulding starts a short delay due to manual clearance of a 'short' moulding from the mould need not be viewed with apprehension for the material's condition.

5.3. Heat Sensitive Materials

Acetal, Nylon, P.V.C., (plasticised).

When moulding heat sensitive materials, great care is needed to prevent "overheating" of the material with subsequent degradation.

5.3.1. When fitting the fixed half of the mould make doubly sure that the probe is central in the gate and not touching the side as this will conduct the heat away from the tip. If the platen is not square to the barrel the probe may be pulled out of centre - check 12mm nuts!

5.3.2. It is better if the melt temperature is achieved by control of the main barrel heater band, than by trying to raise the melt temperature via the probe cartridge heater. This could lead to burning of the material.

5.3.3. Gate control is achieved by fine control of the probe temperature, it is essential that the material can be kept freely flowing in the gate.

5.3.4. If a gate blockage occurs, run the fixed platen forward, pick off the cold slug from behind the gate, clean the end of the barrel, replace the platen and continue moulding.

5.3.5. It has been found that most degradation of Acetal takes place close to the end of the spreader. Carrying out (4) and then continuing to mould at a slightly reduced probe setting will usually clear this material fairly rapidly. If more serious degradation has taken place, remove both platens and purge through the barrel on a fast cycle until clean material is coming through. Replace the platen and the mould and continue moulding.

5.3.6. It is recommended that when running heat sensitive materials, the machine is not left unattended for long periods.

5.4 Material Handling - Notes for guidance

4.1. Polystyrene and other materials liable to "string" can be a problem if the component weighs less than 1g, as the string, if cold, is strong enough to support the moulding as it ejects and it may then swing against the mould face and become trapped. Complete "freeze" of the injection point is virtually impossible, therefore to avoid trapped mouldings keep the probe heater set so that the string is still plasticised and has little or no strength.

Air blast will assist in the successfull ejection of a moulding by stretching the string very rapidly and so breaking it, particularly where stringing originates at the base of the moulding.

5.4.2. Granule shape may play a large part in the tolerance of plunger stroke and shot weight. Large, irregular granules such as those produced by re-grinding, will not only promote jamming of the feed between the hopper and the plunger but will produce a lower shot weight due to the bulk factor of their uncompressed state. Therefore, always use virgin or finely ground re-grind material.

5.4.3. Difficulty in feeding material through the rear, colder area of the chamber may be experienced because of the granule shape or the hardness (resistance to deformation) of the material. One solution is the addition of a very small quantity of lubricant such as zinc stearate (0.5% maximum). Preferably the feed heater setting may be raised or hopper cooling reduced by throttling the waterflow.

5.5. Guides to Easier Handling of Acetal

5.5.1. Polymer Characterisation

Homopolymer or Copolymer Acetal differ mainly in the slightly easier handling of the latter by the broadening of its tolerance of high temperature or long residence at melt temperature.

Homopolymer (Delrin) is a crystalline material with a relatively sharp melt point 170° C - 190° C during which band it requires almost 100% increase in it's heat content (Latent heat) to reach a molten condition. Copolymers (Hostaform, Kemetal) are similar in requirements and may be treated in similar fashion. This requirement for a large heat input at the transformation from 'solid' to 'molten' condition must be applied before the material will flow adequately.

Dampness in badly stored material reveals itself as silvering on the surface of the moulding or, in extreme cases, as a pushing back of the column of fresh materials as the plunger retracts so that no further granules may enter.

Overheating will be first apparent by colour change to brown or black in the moulding and, unless the moulder is able to control this by continued moulding or purging, can build up to a dangerous, almost explosive, condition if the material is confined.

N.B. If Delrin Homopolymer Acetal is to be moulded then a special barrel/spreader assembly needs to be fitted to the machine.

5.6. Heating Chamber Characteristics

The chamber of the RABIT 2/3 is of complex design and provides a long unencumbered feed passage which leads to a finned area and then to a 'hot tip' or probe which form the entry point to the moulding.

The material is subject to three zones of controlled heating:-

5.6.1. **The feed,** which is heated by a heater band controlled by 0% power regulation from the dial on the panel. This heat input is essential in order to 'lubricate' the column of incoming granules in preparation for entry to the main heating area.

5.6.2. **The main heater,** which is a band controlled by a proportioning unit. Controlled by a thermocouple located at a deep, critical point of the barrel and read on an LCD unit on the panel. The area under the band contains the finned area of the spreader and the latent heat to melt is supplied by this band, the fins and the heat of the spreader.

5.6.3 **The spreader and probe,** are heated by contact with the inside surface of the barrel and by a central cartridge heater. This heater is graduated in the heat concentration along its length by preferential winding of the the element so that maximum heat is at the probe end and reduced heat in the main part of the spreader to assist heat input.

5.7. Settings

General guide lines for moulding Acetal indicate that one needs full water flow at the feed throat, a setting of 70 - 90 at the feed heater, 190° C - 200° C on the main barrel setting and 20 to 30% on the probe. If hot water is supplied to the moving and fixed mould halves
40° C - 50° C is suitable but if this is also supplied to the feed throat the feed heater will need to be reset to 70% approx.

The most prevalent cause of degradation in material is oversetting of the probe, say 30% + which gives rise to a temperature at the thermocouple in excess of the Main Band setting so that it switches off. The latent heat requirement is then difficult to achieve and the unplasticised material causes a freeze which **appears to be at the nozzle.** A further increase of probe setting aggravates the problem and causes rapid degradation.

5.8 Moulding Hints

When checking a new mould **always** purge through the fixed half only, as described elsewhere in the manual, to establish gate size, gate 'freeze' tolerance and material condition. If all are acceptable fit the moving half and attempt a moulding run. If excessive gate dribble is present and probe setting is only 20% to 30% increase the heat at the **feed** to encourage pressure relief after injection in **that** area rather than in the probe.

If mouldings show cold flow although the gate stays 'open' check rate of fill at the plunger. A slow, laborious, movement at high pressure indicates general lack of heat in the main body of the material and the Main Band should be increased. At a temperature of 200° C even a homopolymer material will be 'safe' for 30 minutes before degrading so settings up to 220° C are possible **if continuous through put is maintained.**

Increase in gate size even up to 1.6 mm will not necessarily produce a larger mark on the moulding so long as the probe tip is **through** the hole and temperatures are correct.

If the gate freezes as the result of low temperature or blockage by a previous moulding do not alter the probe temperature from a successfully used setting as this may burn the material locally. The best method is to release the two 12 mm nuts on the fixed platen, pull it forward, remove the frozen slug of material, push the platen back and quickly retighten the nuts to clamp the platen between the locked back nuts and the front nuts.
The principle of the probe is that a layer of colder, stationary material insulates the moving layer which passes along the surface of the probe and into the mould. **It is therefore essential that the tip of the probe is within or protruding through the gate hole.**

It is very unusual for any degradation to occur inside the finned area of the barrel. Clearance of decompressed material, even after very serious discolouration, is usually very quickly cleared by removal of the 'cold slug' and continued moulding.

If changing from Acetal to a higher temperature material always purge between materials with a temperature tolerant Polymer eg Polyethylene. The same rule applies when changing to Acetal.

Never leave an Acetal filled barrel on high temperature for any length of time without attention. Never apply an external heating method to an Acetal filled barrel in order to unscrew it - always purge to polyethylene before removal from the machine.

Reference to the Polymer supplier's information is recommended if the material is unfamiliar.

5.9. Suggested Machine Setting For Micro Processor

See also "Fault Finding Chart"

	Trade Name	Material	Made by	Melt Temp	Probe	Feed	Water Mould F. Mould M.	Comments
5.9.1.	Moplen R.O.	HDPE melt 5	Moplen	230° C	20%	75%	All full on	Runs well even on 1mm wall parts - 3 secs cycle
5.9.2.	Propathene	P.P.	I.C.I.	250° C	25%	75%	All full on	Runs well, thin wall ok slightly longer cycle than P.E.
5.9.3.	Polythene	LD PE	I.C.I.	210° C	20%	60%	All full on	Runs well, thin wall ok much longer cycle than HD
5.9.4.	Polystyrol	G.P.P.S.	Shell	230° C	25%	75%	All full on	Runs well, thin wall ok, string if very short cycle 4 secs
5.9.5.	Fabryl	Nylon 66	Grilon	275° C	25%	95%	Temp. Control	Must keep feed hot, if dribble occurs at nozzle decrease the probe setting.
5.9.6.	Nylatron	Nylon 66 - MOSO¼	Polypenco	275° C	25%	100%	Temp. Control	As Nylon 66
5.9.7.	M 3	Nylon 6	B.I.P.	235° C	20%	80%	No water	Easier than 66. Other rules apply as 66
5.9.8.	Hostaform Kemetal	Acetal Co-Polymer	Hoechst Amcel	195° C	20%	90%	All water ½ on feed	Runs very well, fast cycles possible but **don't overheat!** Danger signals, fumes and stains
5.9.9.	Polyurethane SP 495 AC	P.U.	Euro Polymers	215° C	15%	60%	All water on	Need release agent in air blast - 15mm plunger 1½ gramme
5.9.10.	P.V.C.	P.V.C. (plasticised only)	I.C.I.	178° C	10%	60%	All water on	Tends to chill around the probe and produce cold flow in mouldings. If this occurs, decrease water flow to the fixed mould half.
5.9.11.	Zytel S.T.	Tough Nylon	Dupont	250° C	25%	100%	Water ½ on moving only	Temp. Control on mould 60 - 80 ° C
5.9.12.	(P.B.T.)	Crastin SK 605 30% G.F.	G.E.C.	230° C	20%	80%	All off	Gate 1.5 to 1.6
5.9.13.	H.I.	Polystyrene (High Impact)	Shell	220° C	25%	85%	All full on	Keep probe low to avoid 'stringing'
5.9.14.	Novodur	A.B.S.	Bayer	230° C	20%	75%	All full on	Mold: 120-160F (40-71C)
5.9.15.	Santoprene 101/80	Thermoplastic Rubber	Monsanto	185° C	20%	40%	All off	Very easy to process - 15mm ¢ 2.0 grammes Maximum
5.9.16.	Delrin 500	Acetal Homopolymer	Dupont	183° C	20%	95%	Hopper 'on' Moving '½ on' Fixed off	Slight increase in gate size needed over Hostaform Delrin Barrel/spreader required

Kraton, Dynaflex 240°C Probe 35% Feed 99% Cooling on Moving half only

5.10. Fault Finding Chart

A chart is given below to act as a guide for correcting certain undesirable moulding conditions.

Fault	Possible cause	Correction
5.10.1. Moulding short	Material temperature low. Injection pressure low. Mould too cold. Gate or wall section too small.	Raise temperature. Raise pressure. Shut off mould cooling. Try other cures first!
5.10.2. Moulding flashed	Mould damaged. Material too hot. Injection pressure too high. Mould too hot. Mould height incorrect. Part of moulding trapped.	Check with 'Engineers blue'. Lower temperature. Lower pressure. Increase water flow. Check 65mm ±.01mm Clear and clean mould.
5.10.3. Gate dribbles	Material too hot. Insufficient cooling time. Insufficient cooling water. Pressure trapped in chamber.	Lower temperature of probe. Increase timer in .5 steps. Increase water flow to fixed platen. Raise rear heater setting.
5.10.4. Moulding sticks in cavity	Pressure too high. Cycle too short. Mould too hot. Mould damage. Mould draft insufficient.	Reduce pressure. Increase timer in .5 steps. Increase water flow to mould. Check and correct. Raise undercuts on core.
5.10.5. Moulding sticks on ejector	Pressure too high. Surface of ejector rough and damaged.	Reduce pressure. Polish ejector surface.
5.10.6. Burning marks on mouldings	Trapped air in mould 'Dieseling'. Material too hot. Mould too hot.	Check, provide vent. Lower temperature. Increase water flow.

SECTION 6
MOULD DESIGN FOR THE RABIT 2/3

1. This section is intended to be a guide for a basic design criteria and is believed necessary because of the particular layout of the machine.

Rules which give benefits in running and reliability are:

6.1.1. Keep moulds simple with the minimum of parts and faces

6.1.2. Whenever possible use a large circular tapered location between mould halves with the female diameter on the fixed half. This leaves more room for water ways in the moving half and gives a clear area for the air blast ejection of mouldings.

6.1.3. Water pipes should be either in the rear of the mould or on the top surface so as to leave a clear area for the ejected parts.

6.1.4. Use quick release couplings on the water connections.

6.1.5. Bring the ejector mechanism out of the back of the mould rather than enclose it within the mould. This assists in the location of water cooling holes and means that the mechanism can be lubricated without stopping the machine.

6.1.6. If pins or other projections are extending from the front of either of the mould faces keep them on or above the horizontal centre line if possible and certainly **never** directly below the moulding(s)

2. Mould Design Parameters

6.2.1. All moulds must have the 'nozzle' form to the dimensions shown on the Platen Capacity Drawing.

6.2.2. All moulds must have the thickness shown on the Platen Capacity Drawing.

2.3. The two location diameters of the platens may be used to align the mould halves only if there are no location pins or matching tapers. However, if the mould does have its own location the fixed half should register in the platen and the moving half be free to align itself against dowels or taper.

2.4. Water cooling is by conduction from the cooled fixed platen on the fixed half of the mould.

Passageways may be drilled in this half of the mould for additional cooling, in which case the contact between the rear face of the mould and the recessed face of the platen must be reduced to a 20mm Ø around the nozzle and a 5mm rim around the outside edge to prevent tilting.

6.2.5. Water cooling in the moving half is as normal practice in Moulding Machines but for ease of access to the moulding and to prevent mouldings being caught keep pipes at the rear of the platen i.e. pass them through the hole in the platen.

If it is not possible to pipe as recommened keep pipes which are within the platen area at the top of the mould halves and use rigid pipe to conduct water to and from this area before attaching flexibles.

6.2.6. Air blast is often required in order to clear the moulding away from the mould faces in the short space of time that the mould is open. This is particularly relevant when using materials which tend to 'string,' as with very small parts, their natural weight is capable of support by a string.

6.2.7. Moulds for this machine may be of normally used metals i.e. brass or aluminium for very short runs; nickel chrome alloy steels for longer runs and hardened and/or chromed for long runs.

The mould construction is just as important on this small machine as on a large one.

6.2.8. Care of moulds is vital to any fast-cycling machine. Damage may easily be caused by use of screwdriver blades or similar tools to remove jammed parts.

Always use brass or aluminium tools and, in the event of any damage, stop the machine and re-polish the mould or an unreliable run will result probably with more damage occuring each time a moulding sticks in.

6.2.9 Gate Entry Into Part Or Runner.

The suggested dia. of 1.1 to 1.2 mm is a good starting point and is suitable for most engineering thermoplastics.

If engineering thermoplastics particularly, glass filled are to be used, and if a sprue is used we recommend a minimum gate diameter of 1.5 to 1.6 mm.

SETTING UP CLAMPING ON RABIT MACHINE

Fit two nuts on each ejector stud and run them right back to the end of the threaded portion. Warm up machine spreader to about 180°C and then fit fixed platen to front of spreader with a nut on each ejector stud. Making sure that the fixed platen is square to the tie bars, tighten the front nuts to hold platen to spreader. Run the two nuts behind the platen up to the platen and then tighten and lock the two nuts together using two spanners. This is then the reference position for the fixed platen.

Operate the cam of the machine by hand pushing the cam down to it's horizontal position which will cause the machine to be in the mould close condition.

With a depth micrometer measure the distance 'A' at each tie bar. If the two measurements vary more than .002"-.003" take out longer tie bar and reduce it's length (in a lathe) until both tie bars are the same length. Replace tie bar and re-check figures.

Fit the test mould block into the moving platen and with the depth mic. take a measurement either side from the bottom of the tie bar counterbores to the top of the mould block. This is measurement 'B'. The depth of the block is 65mm ±0.01mm but measurement 'B' might vary from this depending on the depth of the counterbores.

Thickness of spacers will be ('B'-'A') - 0.018" to give correct clamping. Turn spacers and fit in tie bar counterbores in moving platen. Fit moving platen to machine, and tighten.

Apply as little micrometer blue to the surface of mould block, and operate machine. For correct clamping, the blue should be transferred to the face of the fixed platen, and the machine should not 'bang'. If satisfactory, transfer spacers to tie bar counterbore in thrust plate and use two M12 x 40LG cap screws to secure. (FBK 065).

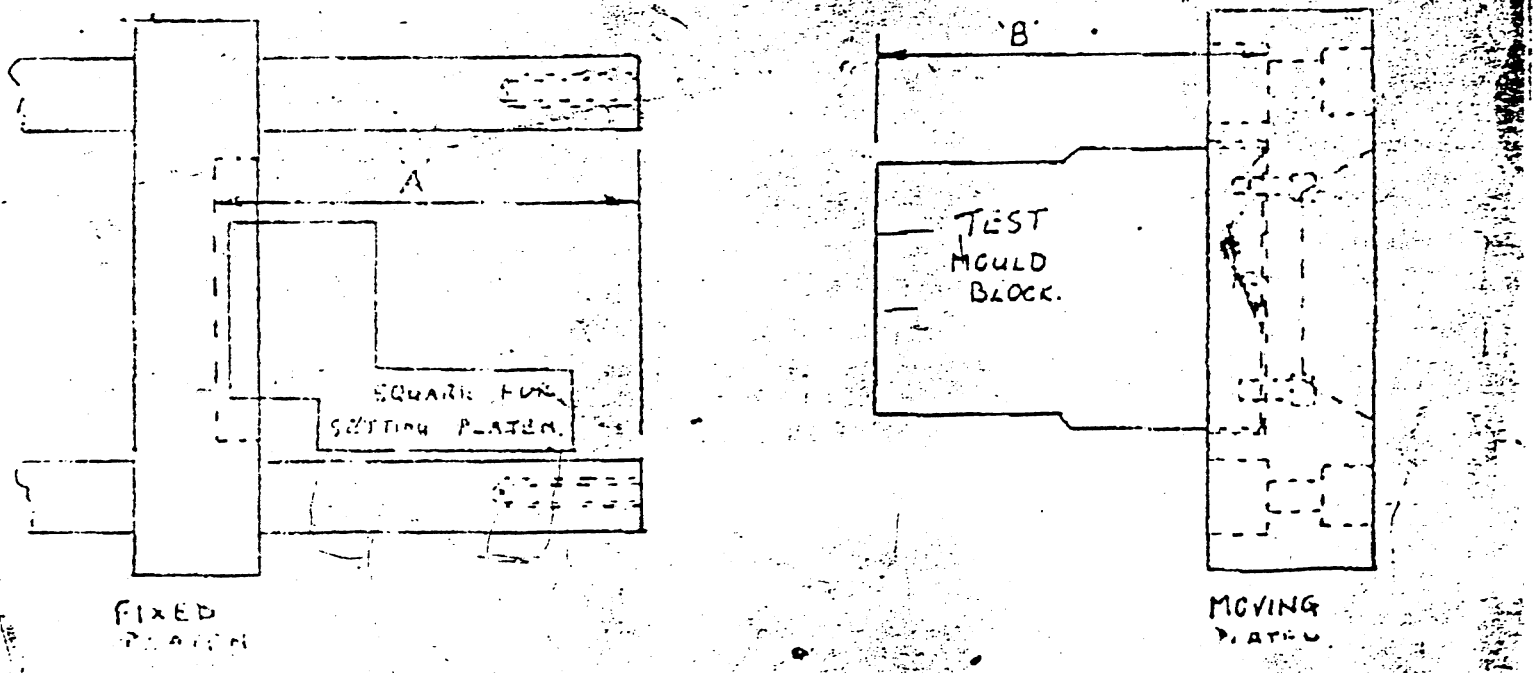

RABIT 2/3 PLATEN CAPACITY LAYOUT

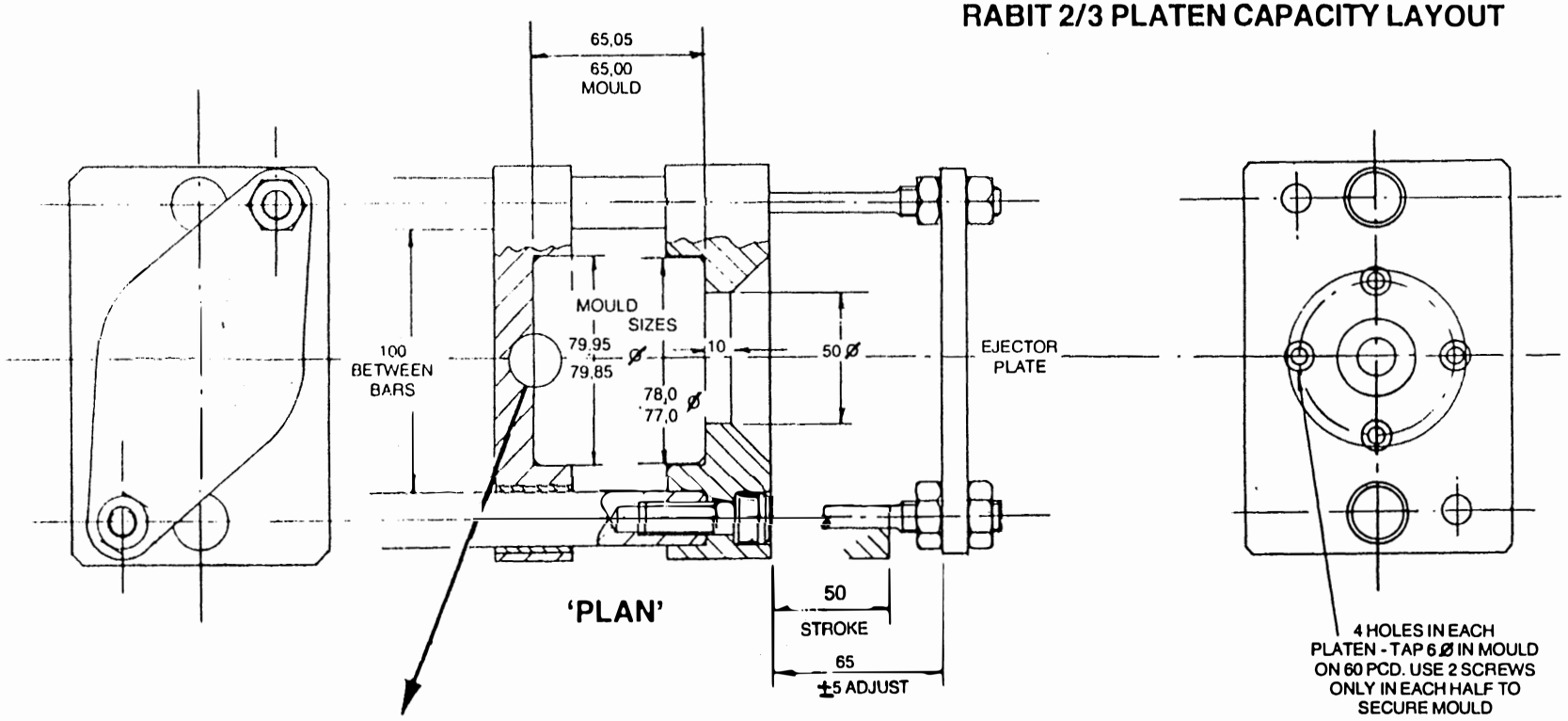

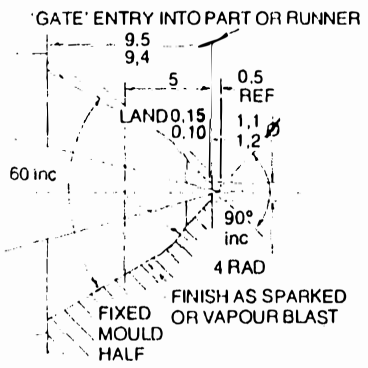

79.95 = 3.148
79.85 = 3.1435

78.0 = 3.071
77.0 = 3.031

.020
into Part

Gate diameter
.038 w/ tungco tip
.048-50 steel tip

RABIT 2/3 PLATEN CAPACITY LAYOUT

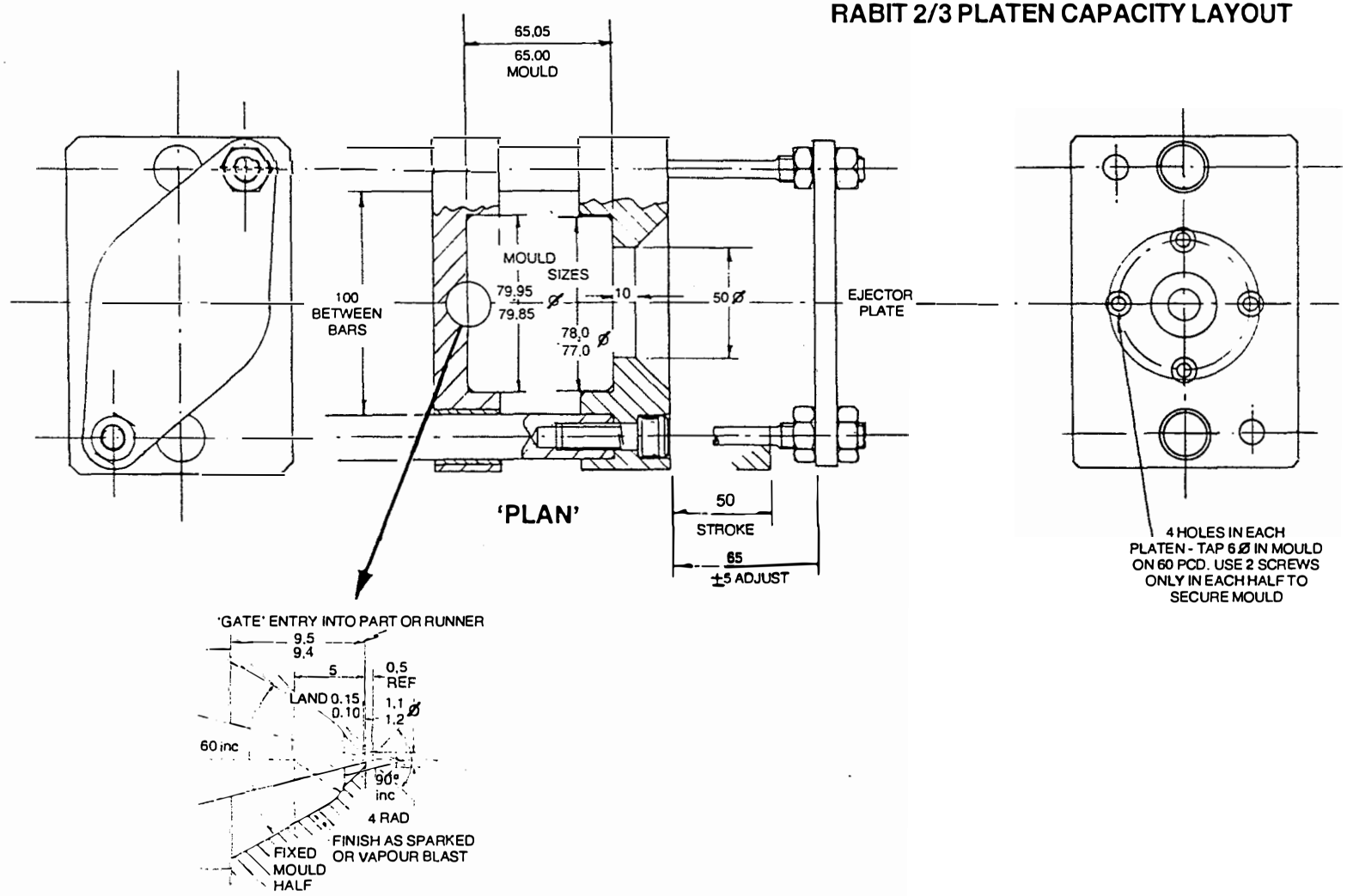

GATE DIA. (D) MAY BE 1.1/1.2 UP TO 1.5/1.6 FOR ENGINEERING MATERIALS

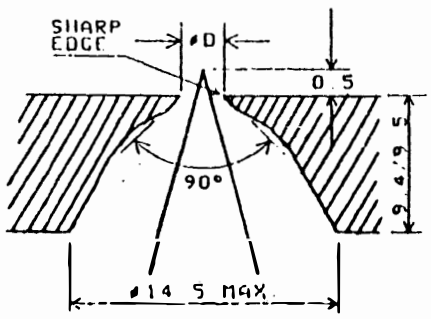

FIG. 1 GATING DIRECTLY INTO PART

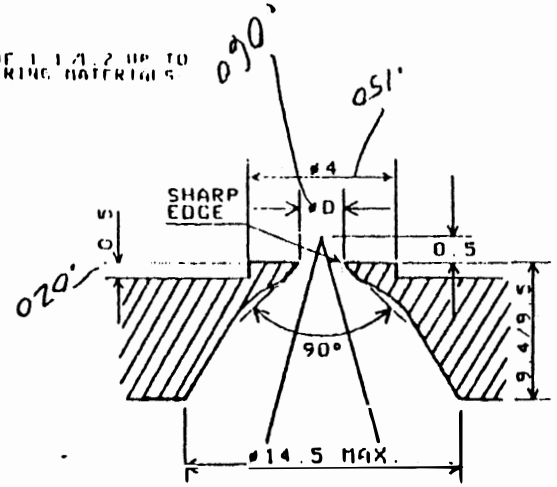

FIG. 2 GATING INTO PART TO LEAVE GATE SCAR BELOW SURFACE.

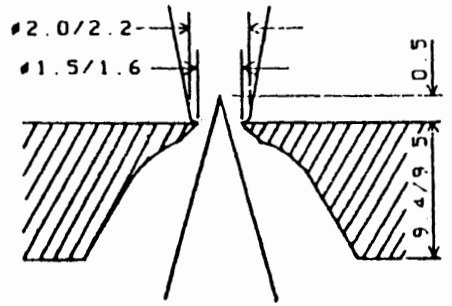

FIG. 3. GATING INTO SPRUE MAINTAINING SHARP EDGE TO ENSURE BREAK OFF

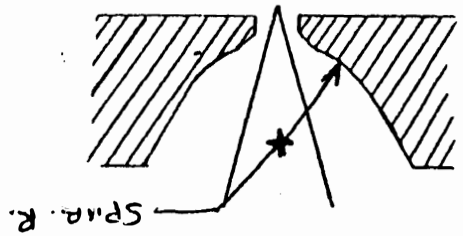

FIG. 4 N.B. THIS WILL NOT WORK DUE TO PARALLEL

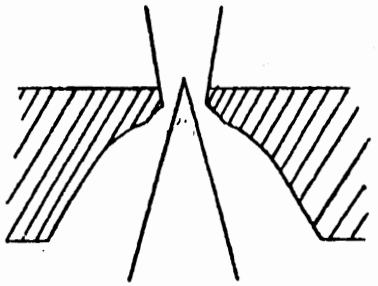

FIG. 5 N.B. THIS IS ALSO BAD PRACTICE AS IT DOES NOT GIVE EASY BREAK OFF AND WILL BE DIFFICULT TO RUN.

MINING & CHEMICAL PRODUCTS LTD

GATE DESIGN FOR RABIT 2/3 MACHINE

CK.	C.L.	LOC. NO.	CHANGES	BY	DATE	C N

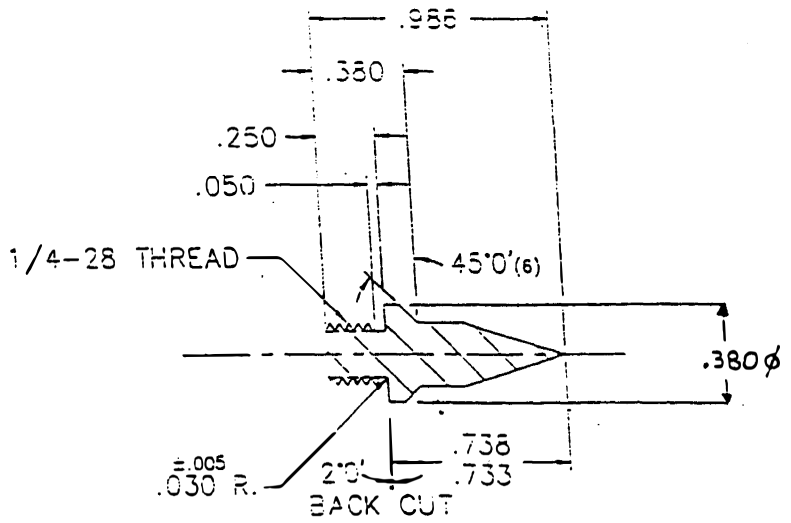

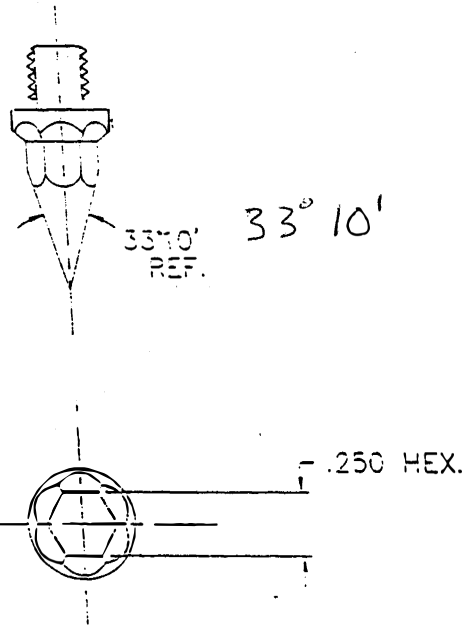

Hot Tip #50

MATERIAL ~ AMPCO 945 ~ ARMOLOY COAT

DRAWN 2 X SIZE

MATERIAL ~ A-2 STEEL HARDEN AND GRIND

ROCK "C" 58 - 60

MACHINING LIMITS
FOR 2-PLACE DECIMALS ± .005
FOR 3-PLACE DECIMALS ± .001
ALL SCREW LOC. ± 005
ALL DOWEL LOC. ± 0005
UNLESS OTHERWISE SPECIFIED
REFERENCE

LAST ENG. C.N.# ____

WHEN PRACTICAL
ALL TOOLS TO HAVE TOOL NO. MARKED WITH 5/16 STD. NUMERALS & LETTERS

NO. 1 OF 1 SHEETS — SIZE TOOL NO.

No.	Amt.	Material list	Mat

Model

Also used for

Part

Tool TIP

Drawn R. Date 3/22/91

Checked Approved

TomKen TOOL & ENGINEERING, INC.
RABIT MOLDING DIVISION
4401 N. SUPERIOR DR.
WINONA, IN 47302-6478

TIP

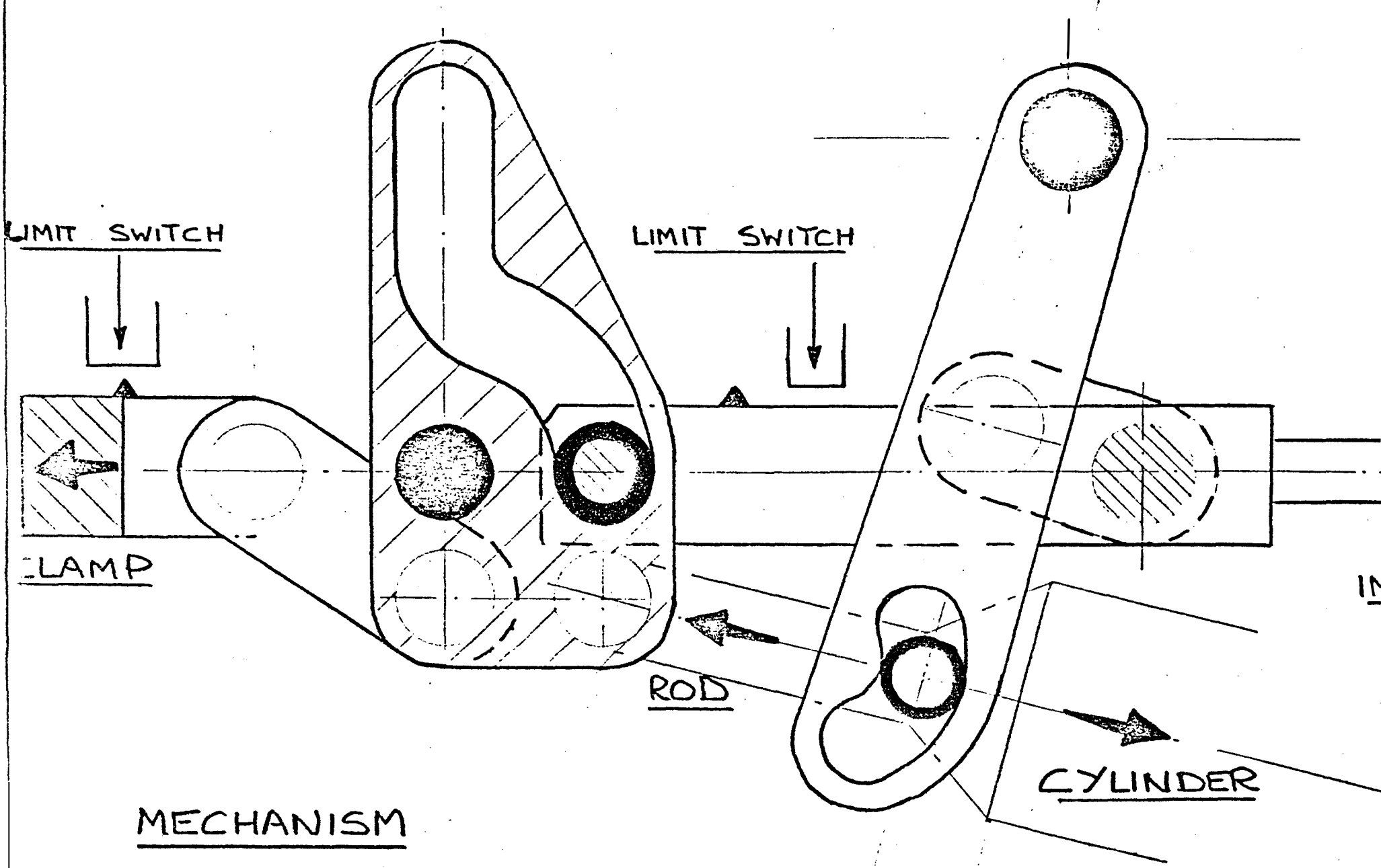

MECHANISM

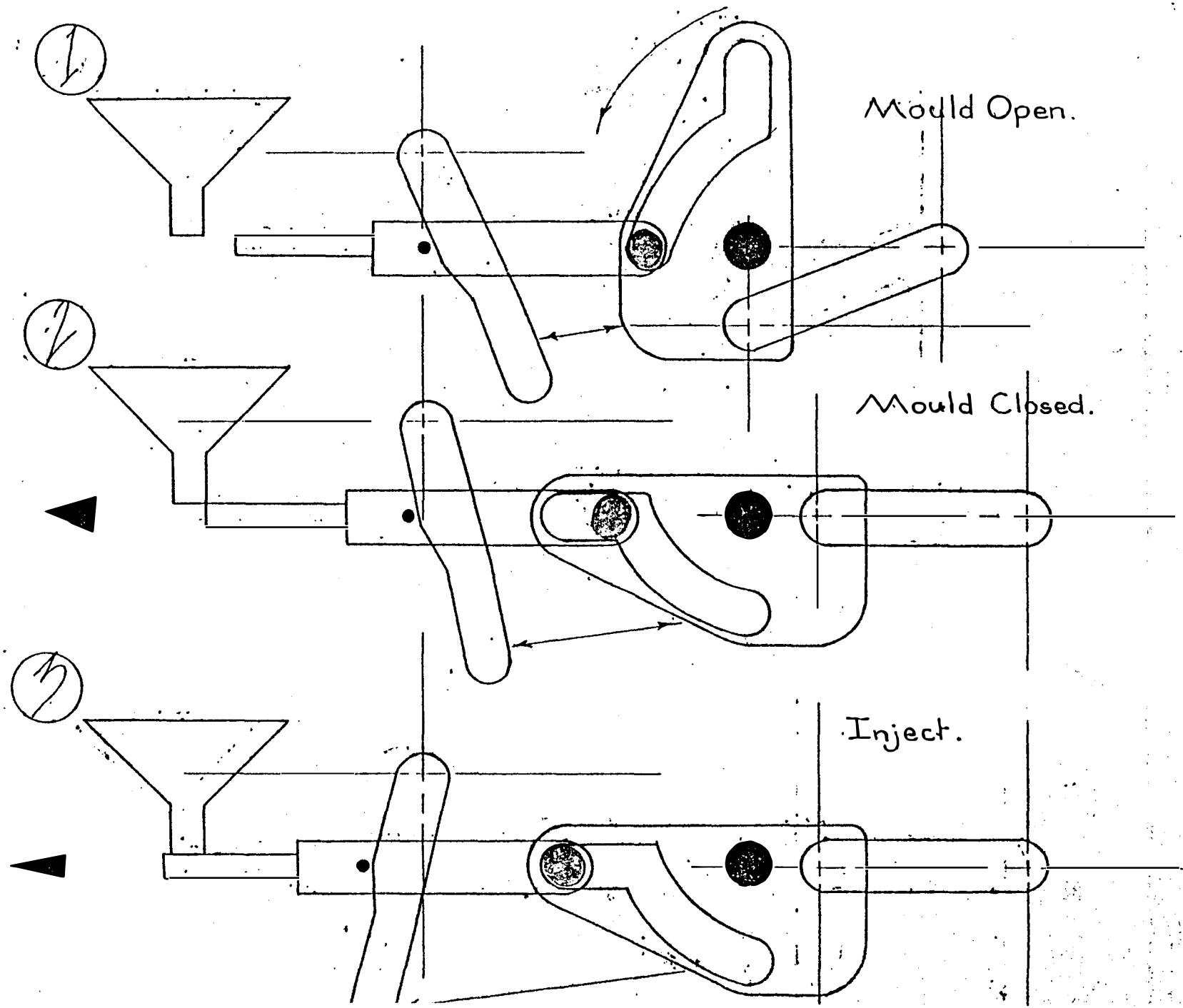
1
Mould Open.
2
Mould Closed.
3
Inject.

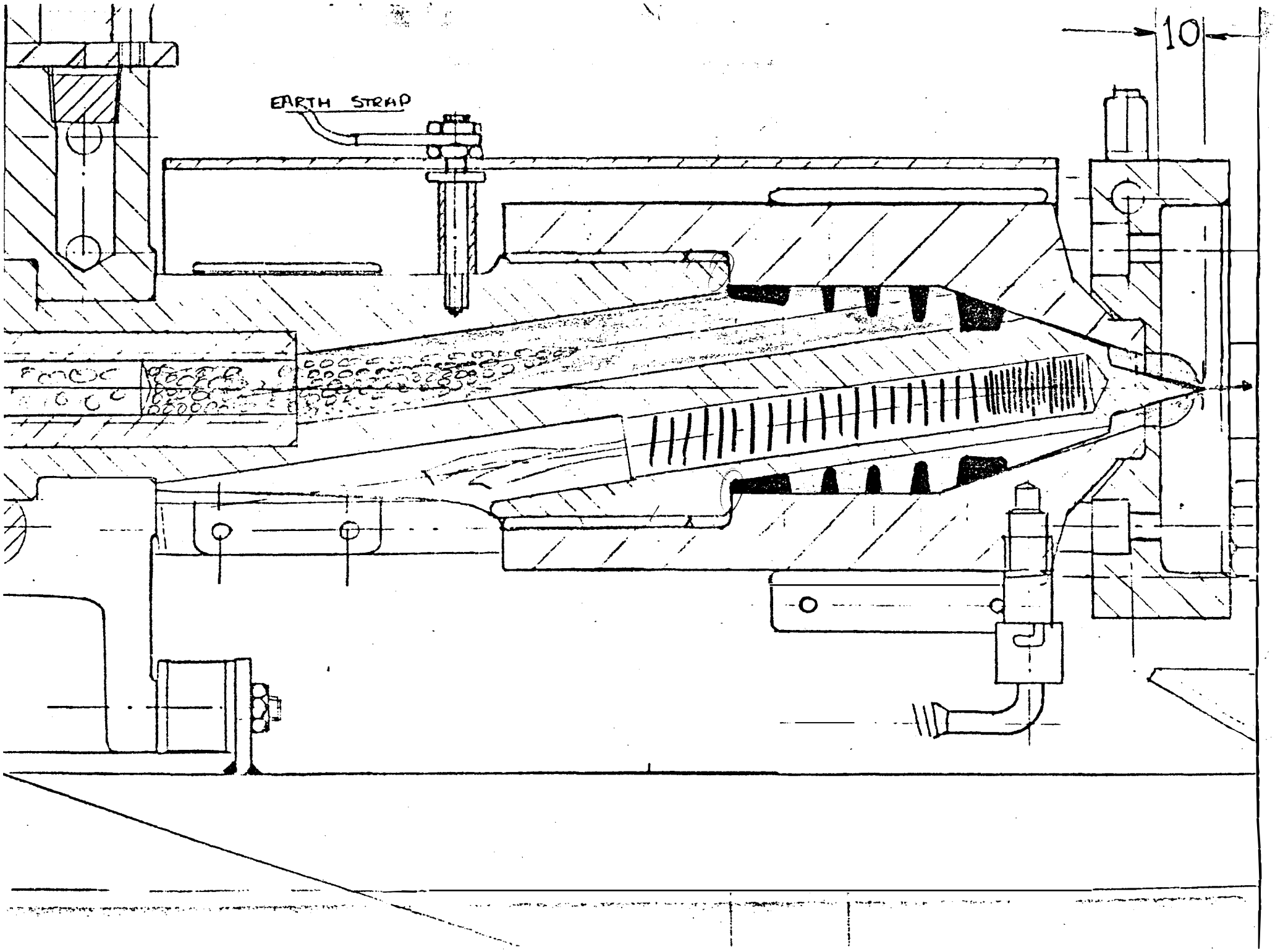
10
EARTH STRAP

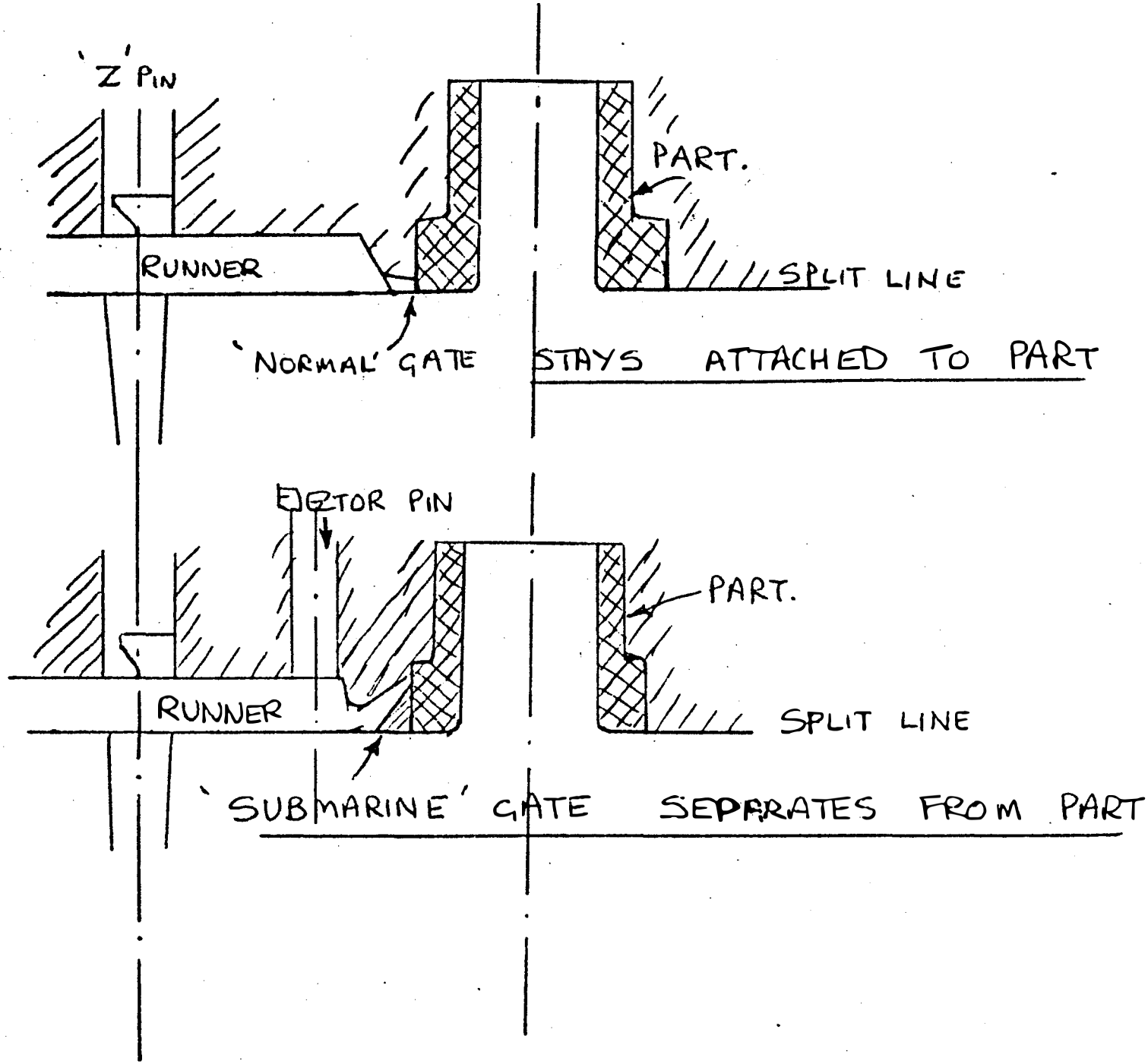
'Z' PIN
PART.
RUNNER
SPLIT LINE
'NORMAL' GATE
STAYS ATTACHED TO PART
EJECTOR PIN
PART.
RUNNER
SPLIT LINE
'SUBMARINE' GATE
SEPARATES FROM PART

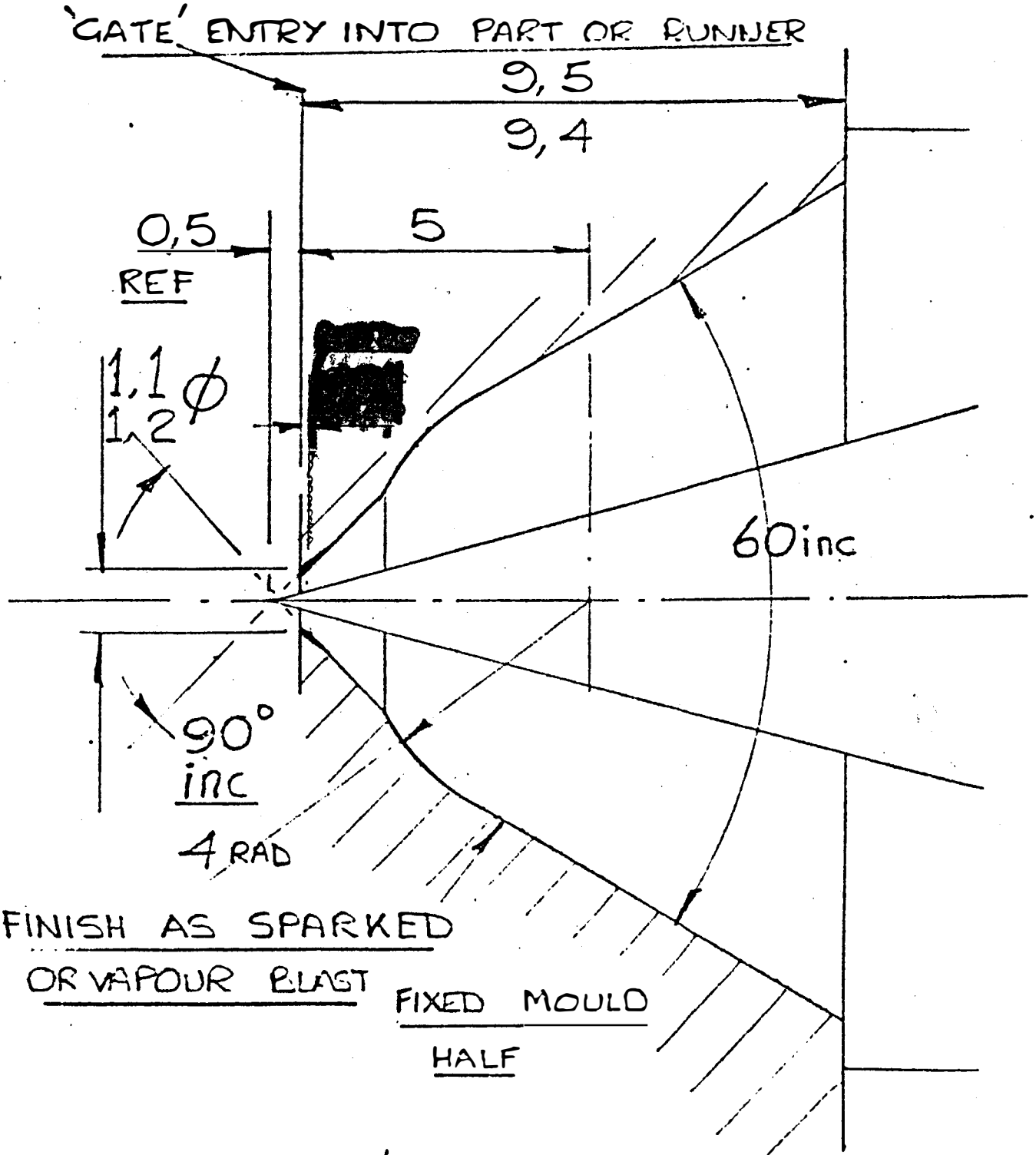

RABIT 2/3 'ACETAL' REQUIREMENT FOR 'GATE' DESIGN

GATE DIA. MAY BE 1:1 / 1:2 up to 1.5 / 1.6 for engineering materials.

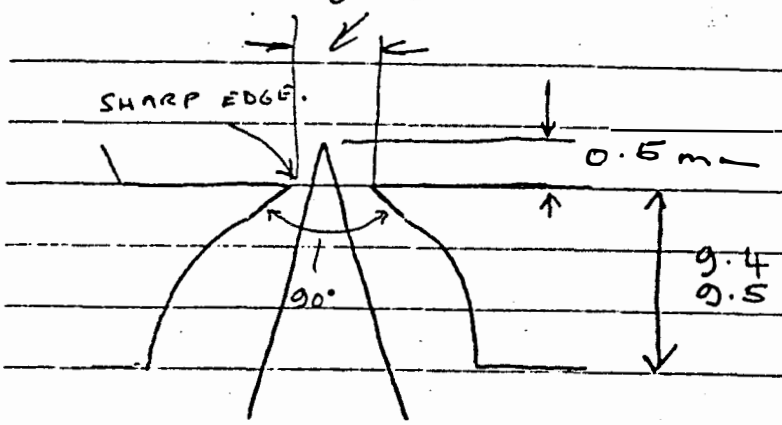

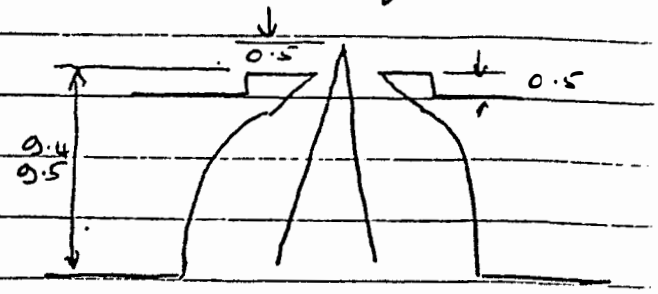

GATING DIRECTLY INTO PART.

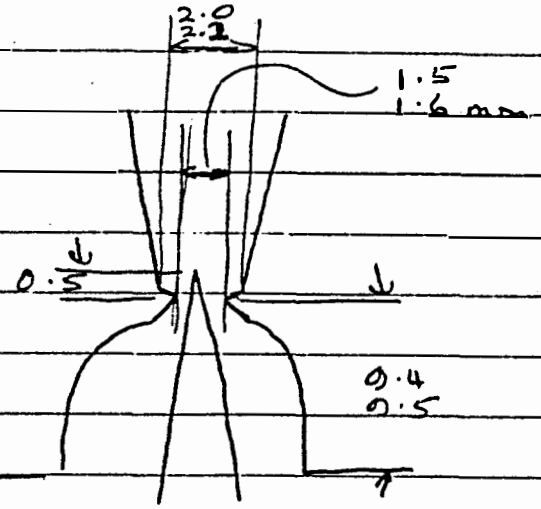

GATE INTO SPRUE MAINTAINING SHARP EDGE TO INSURE BREAK OFF.

GATING INTO PART TO LEAVE GATE SCAR BELOW SURFACE

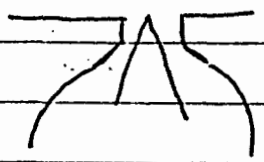

N.B. THIS WILL NOT WORK DUE TO PARALLEL.

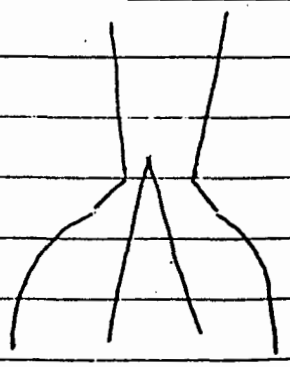

N.B. THIS IS ALSO BAD PRACTICE AS IT DOES NOT GIVE EASY BREAK OFF AND WILL BE DIFFICULT TO RUN.

Specification

		Standard Plunger	
Plunger Diameter	12mm (0.47")	15mm (0.59")	10mm (0.39")
Volume*	2cm³ (0.14"cu)	2.5cm³ (0.15"cu)	1.5cm³(0.09"cu)
Shot Weight* (Polystyrene)	2g (0.07oz)	2.5g (0.09oz)	1.5g (0.05oz)
Pressure	900kg/cm² (12,780psi)	600kg/cm (8,520psi)	1400kg/cm (19,880psi)
Clamp	50kN (5tons)		
Mould Size	80mm Ø (3.15")	Note: All moulds must be 80mm Ø x 65mm thick	
Between Bars	100mm (3.94")		
Platen Stroke	50mm (1.97")		
Mould Thickness	65mm (2.56")		
Electrical Supply	220/240V or 110/120V 50-60Hz		
Wattage	1.45Kw 1.45Kw		(3.15x2.5")
Air Pressure (max)	7.5kg/cm² (110psi)		Feed: 250W 50mmX40mm (2"x1.5")
Air Supply	Dry, filtered, lubricated.		Probe: 450W .5" OD x 4"
Air Consumption	226 l/min 4 sec cycle (8 cu.ft./min.)		
Dry Cycle Time	1 sec.		
Weight	74kg (163lbs) Hopper Capacity 3kg (6.6lbs) approx.		
Dimensions	L 101cm (39.5") H 61.5cm (24.25") W 24cm (9.5")		

* Dependant upon material and granule shape

MCP Equipment reserve the right to alter specification without prior notice.

Rabit 2/3 Platen Capacity Layout

(Dimensions in mm throughout)

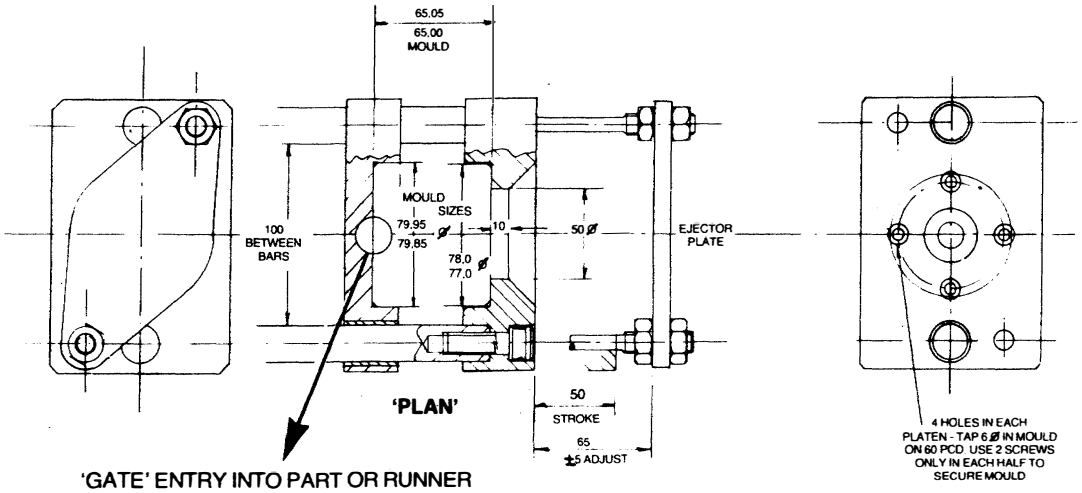

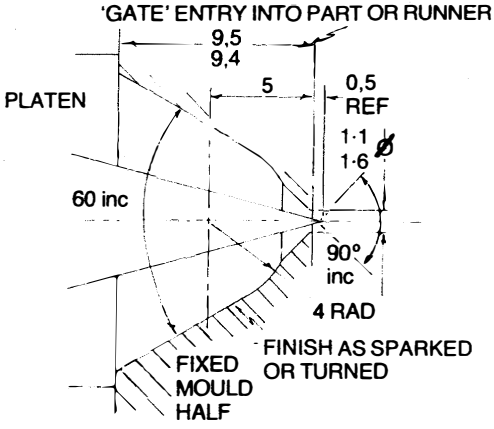

Core Puller

Designed to locate above and astride the fixed and moving halves of the mould, the core puller is automatically in phase with the mould open/close cycle.
This tooling aid is available as an extra and increases mould design options for the RABIT.

Mould Clear

A mould clear facility is also available within the electronic control circuitry.

MCP Equipment

A Division of Mining and Chemical Products Ltd.

Unit 8, Whitebridge Industrial Estate, Whitebridge Lane, Stone, Staffordshire ST15 8LQ.
Telephone: (0785) 815651 Fax: (0785) 812115.

Wattage	1.45Kw 1.45Kw
Air Pressure (max)	7.5kg/cm² (110psi)
Air Supply	Dry, filtered, lubricated.
Air Consumption	226 l/min 4 sec cycle (8 cu.ft./min.)
Dry Cycle Time	1 sec.
Weight	74kg (163lbs) Hopper Capacity 3kg (6.6lbs) approx.
Dimensions	L 101cm (39.5") H 61.5cm (24.25") W 24cm (9.5")

* Dependant upon material and granule shape

MCP Equipment reserve the right to alter specification without prior notice.

in mm

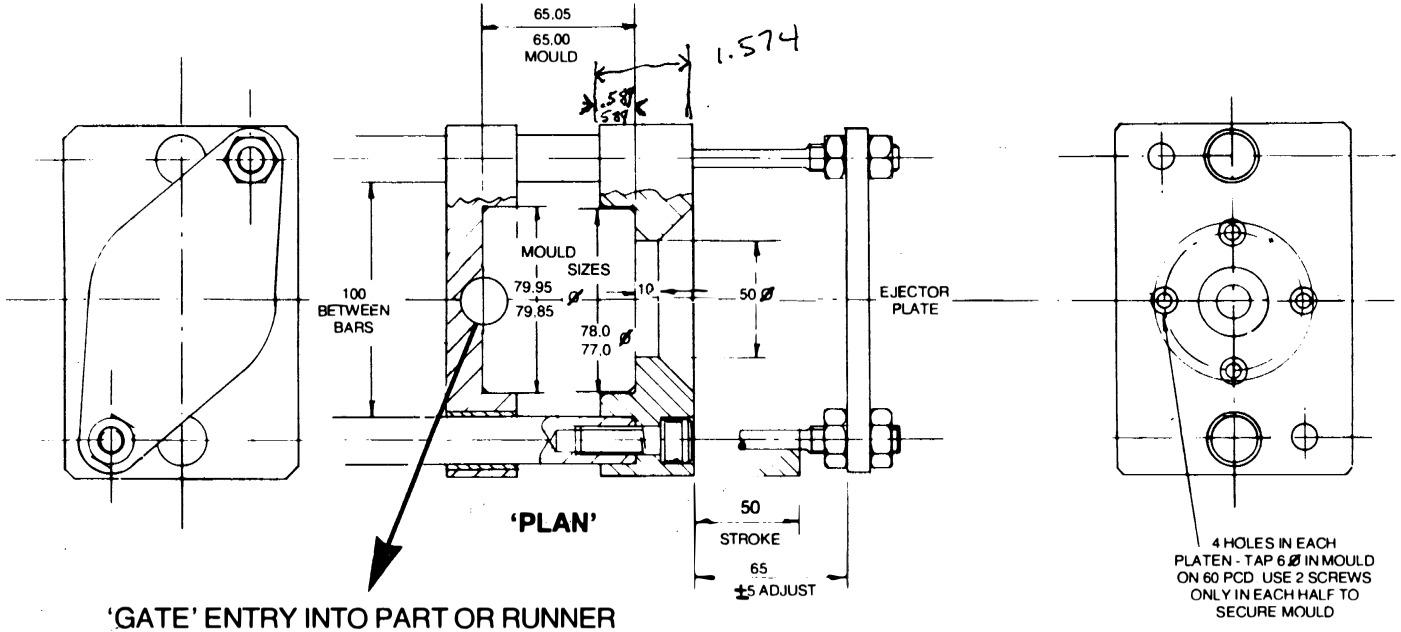

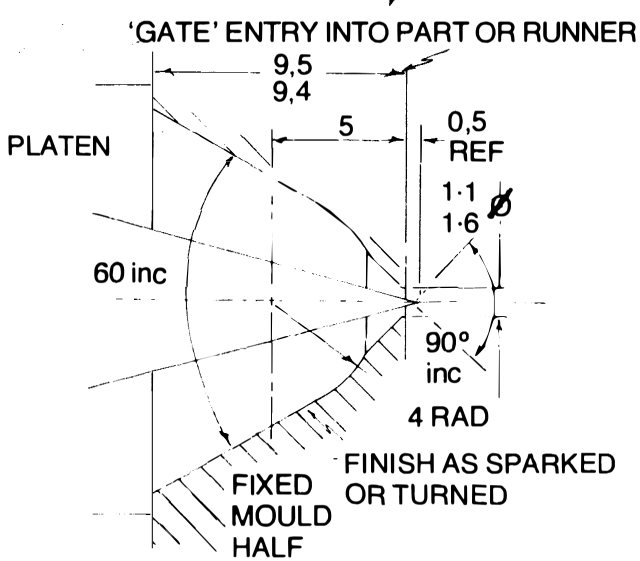

Core Puller

Designed to locate above and astride the fixed and moving halves of the mould, the core puller is automatically in phase with the mould open/close cycle.
This tooling aid is available as an extra and increases mould design options for the RABIT.

Mould Clear

A mould clear facility is also available within the electronic control circuitry.

8.1. PARTS LIST MCP RABIT 2/3

Description	Part No.
Hopper Assy	32-037A
Scotch Bar Assy	32-036A
Fixed Platen Assy	32-035A
Heater Chamber/Spreader	32-034A
Barrel Heater Assy	32-206A
Feed Heater Assy	32-207A
Cartridge Heater Assy	32-208A
Heater Cable Connector Shell	EP 4034
Heater Cable Connector Cover	EP 4035
Main Casting	32-137
Bush	MBP 004
Anti-Vibration Mounting	MMG 014
1/8″BSPT - 8 O/D Tube Stud Elbow	MPF 023
1/4″BSPT Pressure Plug	FBK 066
Heater Plug Bracket	32-164
Main Pin	32-130
Nylon Washer (special)	FW 3038
1/4″BSPT Pressure Plug (for pins)	FBK 047
Tie Bar	32-151
Ejector Stud	32-152
Main Cam Roller Assy	32-209A
Small Pin	A32-126
Cytan Cylinder	32-157
Rear Clevis	32-132
Arm Pin	32-133
Cylinder Arm	32-129
Bush for Cylinder Arm	MBP 006
3/8″BSPT Male - 1/4″BSPT Female Red. Bush	MPF007
1/4″BSPT - 1/4″BSP Elbow 8mm O/D	MPF 008
Slide Carriage	32-124
Injection Fork	32-127
Short Toggle	32-125
Pin	32-123
Spring Pin	FP 1006
Injection Fork Pivot	32-153
Cam Follower	MBB 010
Main Cam	32-121
Thrust Plate	32-120
Rod End	32-128
Toggle	32-122
Pin	32-123
Base Frame	32-154
1/8″BSP Male - 1/8″BSP Female Valve	MPF 028
1/8″BSP x 8 O/D Tube Stud Adaptor	MPF 030
End Cover	32-162
1/8″BSP - 1/4″Female/Male Adaptor	MPF 015
1/8″BSP - 1/8″BSP Elbow	MPF 016
1/4″BSP Silencer	MPF 019
1/4″BSP x 9 O/D Tube Stud Black Elbow	MPF 024
3/2 Roller Valve (modified)	32-167
Stop Switch Operating Knob Assy	ES-4026
Cover Limit SW (roller)	ESB 002
Pressure Regulator and Gauge	MPF 005
Gauge Mounting	32-166
4mm Equal Bulk Head	MPF 025
8 O/D Tube Equal Tee	MPF 009A
1 5/8″ Snap Bush	WG1013
5 Way Valve	MPF 001
3 Way Valve	MPF 002
1/4″BSPT 1/4″BSPT Bulkhead Fitting	MPF 014
1/4″Female to 3/8″Female Reducer	MPF 012
Silencer	MPF 013
Guard Assy	32-021A
RABIT 2/3 Switch Loom	32-017A
Non Contact SW. P.C.B. Assy MkII	32-026A
RABIT 2/3 Interface Cable	32-014A
RABIT 2/3 Heater Interconnection Cable	32-013A
Interface Box MkIII Assy	32-022A
Base Frame	32-154
Earth Strap (main frame to base frame)	32-114
Earth Lead (to control box)	32-018A
Magnetic Actuator	ESA 002
Cotter	32-144
Heat Shield	32-163
Earth Strap (barrel to main frame)	32-113
Plunger Retaining Clip	32-173
12mm Plunger/Sleeve	32-140/141
15mm Plunger/Sleeve	32-142/143
10mm Plunger/Sleeve	32-145/146
Thermocouple	ELM 017
Bayonet Adaptor (T/C)	ELM 006
Moving Platen	32-149
Ejector Plate	32-150
Mini Poppet Valve	MPF 004
Side Panel (Screended)	32-169
Side Panel (Un-screened)	32-168
1/4″BSPT Female Threaded Swivel Coupling 3/8″	MPF 018
1/4″BSPT Female Threaded Swivel Coupling 5/16″	MPF 017
Control Box	32-010A
Microprocessor Control Unit	ELM 018
Mould Clear Unit Assy	32-025A
Audible Alarm	ELM 010
Xenon Beacon	ELM 011
7A Ultra Fast Fuse	EF 1008

Barrel: 750W 80mmX80mm
(3.15x2.5")
Feed: 250W 50mmX40mm (2"x1.5")
Probe: 450W .5" OD x 4"

TEMPERATURE SETTING RABIT 2/3 CONTROLLER

1) TO ENSURE THAT THE TEMPERATURE DISPLAYED BY THE RABIT CONTROLLER RELATES TO THE TEMPERATURE OF THE BARREL, THE FOLLOWING PROCEDURE MUST BE FOLLOWED:

1.1. SET THE CONTROLLER TO THE REQUIRED TEMP. OF THE BARREL AND SWITCH ON THE MACHINE.

1.2. WHEN THE BARREL HAS REACHED THE SET TEMP. UNCLIP THE THERMOCOUPLE PLUG FROM THE BACK OF THE CONTROLLER AND MEASURE THE BARREL TEMP. USING A HAND HELD TEMP. SENSING DEVICE.

1.3 THE READING TAKEN SHOULD CORRESPOND WITH THAT DISPLAYED BY THE RABIT CONTROLLER

1.4. IF THE TEMP. READINGS FAIL TO CORRESPOND THE SIMPLE SET US PROCEDURE DESCRIBED BELOW MUST BE FOLLOWED TO Correct ANY DIFFERENCES.

2. THE FOLLOWING REFERS TO COMPONENTS CATED BELOW
THE THERMOCOUPLE LEAD ON THE RABIT CO N ON
DRAWING 1.4.1.3 (WE WILL SEND IN POS

2.1. USING A DIGITAL VOLT METER WITH A NEG E PROBE CONNECTED TO TEST POINT 6, SET VR 1 TO 2.56 VOLTS AT TEST POINT 1, AND SET VR 2 TO 1 VOLT AT TEST POINT 2

2.2. USING A K TYPE TEMP. SIMULATOR A IED TO THE THERMOCOUPLE INPUT, SET TO AN INPUT OF 300 DEGREE C AND CONFIRM THAT THE RABIT CONTROLLER READS 300 DEGREE C ON THE LCD.

(IT IS IMPORTANT THE PROBE AND FEED SHOULD BE SET TO MINIMUM, THE EJECT TIME OFF, AND THE SYSTEMS SET IN COMPONENT CLEAR MODE. THE HEATER SWITCH SHOULD BE OFF)

COMPENSATE FOR ANY ERRORS IN TEMP. WITH VR 1

2.3. SET THE TEMPERATURE SIMULATOR TO A FIXED INPUT OF 130 DEGREE C, AND COMPESATE FOR ANY ERRORS WITH THE VR 2 BY APPLYING THE SAME TECHNIQUE AS WITH THE 300 DEGREE C.

2.4. A MINOR FLUCTUATION OF TEMP, MY BE SEEN. IF SO REPEAT THE SETTING 300 DEGREE C/ 130 DEGREE TO THE MIDPOINT OF FLUCTUATION. REPEAT THIS OPERATION ABOVE TO GIVE BEST RESULTS.

3. THE FOLLOWING REFERS TO THE THREE POTENTIOMETERS BELOW THE FRONT PANEL, LISTED VR 7, VR 8 AND VR 9 AS SHOWN ON DRAWING 14.13.

3.1. WIND THE PROBE AND FEED POTS ON THE FRONT PANEL TO MAXIMUM, THEY SHOULD READ 99, COMPENSATE FOR ANY D SCREPENCIES BY ADJUSTING VR 7 FOR PROBE AND VR 8 FOR FEED UNTIL A EADING OF 99 IS OBTAINED.

3.2. SET THE RABIT CONTROLLER TO EJECT TIME AND DISPLAY. ADJUST THE EJECT TIME POT TO MAX. AND TEN SECONDS S LD BE DISPLAYED. ADJUST VR 9 TO CORRECT ANY OFFSET.

4. FINISH OFF BY SEALING ALL POTS AND RECHECKING ON A RABIT MACHINE, AND BY USING THE HAND HELD TEMP. SENSING DEVICE.

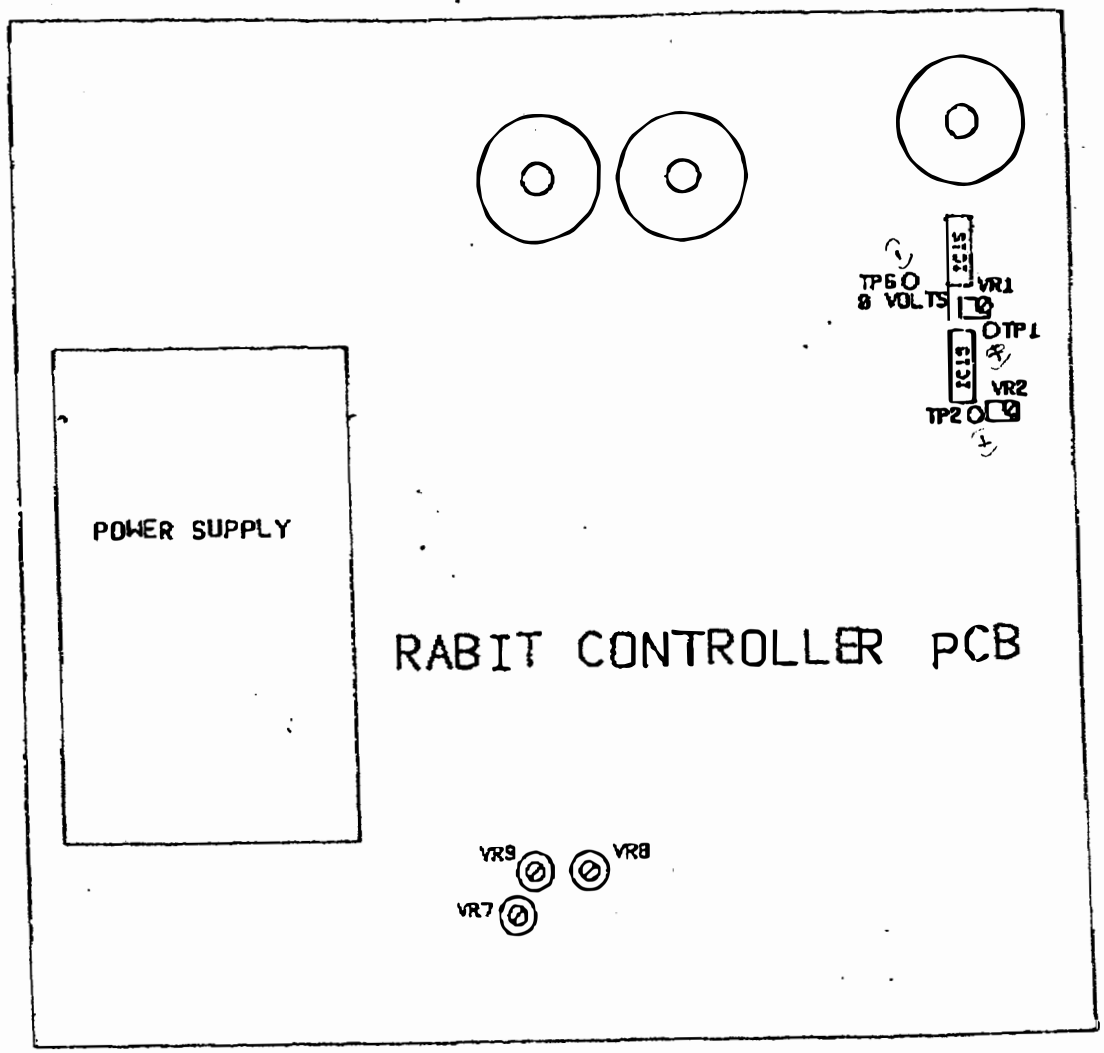

FRONT OF UNIT

C				THIS DRAWING IS ISSUED ON CONDITION THAT IT SHALL NOT BE REPRODUCED OR COMMUNICATED TO ANY THIRD PARTY OR USED FOR PURPOSE OF MANUFACTURE WITHOUT THE WRITTEN AUTHORITY OF:- CIRRUS PETROLEUM LTD BROSTON ENGLAND	DRAWN	CIRRUS PETROLEUM LTD. TEL (0527) 27002 TELEX 338005	TITLE RABIT TEST POINTS & POTS (FOR SET UP).	DRAWING 13c
B							NUMBER OF SHEETS OF
A					APPROVED		DATE OF ISSUE
REVISION		INITIAL	DATE				

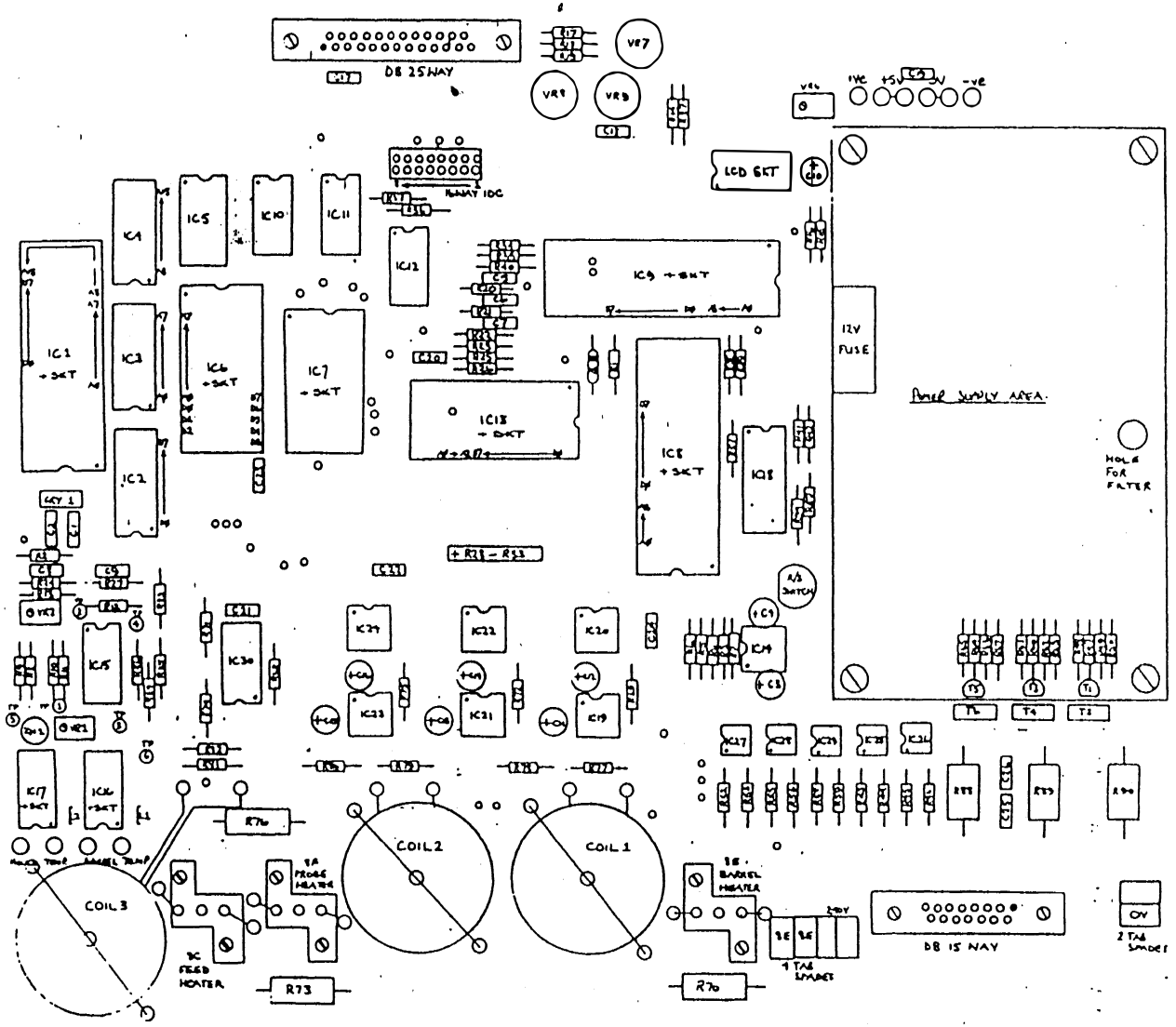

DRAWN	TRACED	CHECKED	APPROVED	DATE	SCALE

DRAWING No. 1102

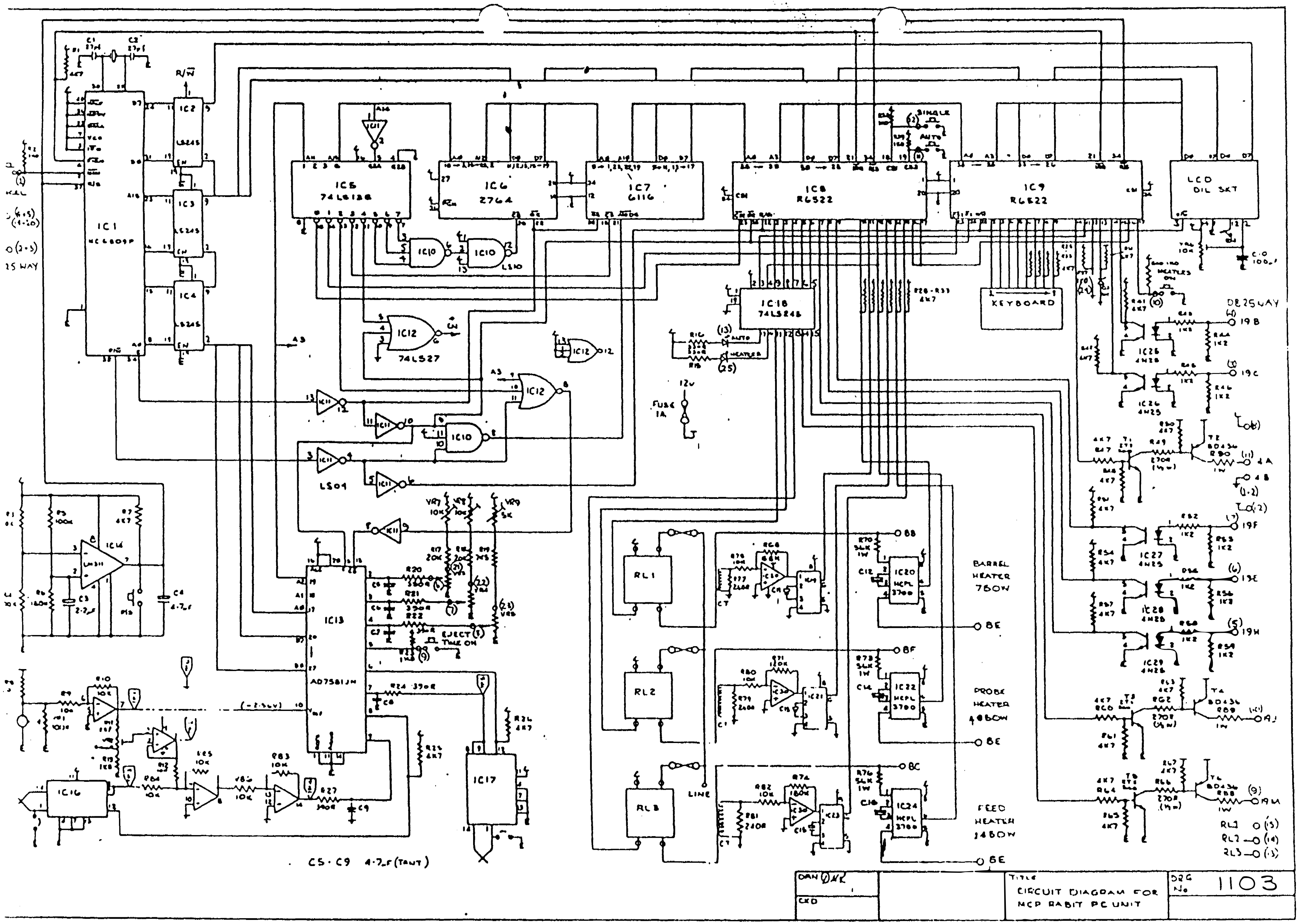
IC1 MC6809P
IC2 LS245
IC3 LS245
IC4 LS245
IC5 74LS138
IC6 2764
IC7 6116
IC8 R6522
IC9 R6522
LCD DIL SKT
KEYBOARD
IC18 74LS245
IC12 74LS27
LS04
IC13 AD7581JN
IC17
IC16
IC14 LM311
RL1
RL2
RL3
LINE
BARREL HEATER 760W
PROBE HEATER 480W
FEED HEATER 1480W
IC20 MCPL 3700
IC22 MCPL 3700
IC24 MCPL 3700
DB25WAY
FUSE 1A
12V
EJECT TIME ON
SINGLE
AUTO
HEATERS ON
C5-C9 4·7μF (TANT)
25 WAY
DRN
CKD
TITLE
CIRCUIT DIAGRAM FOR
MCP RABIT PC UNIT
DRG No
1103

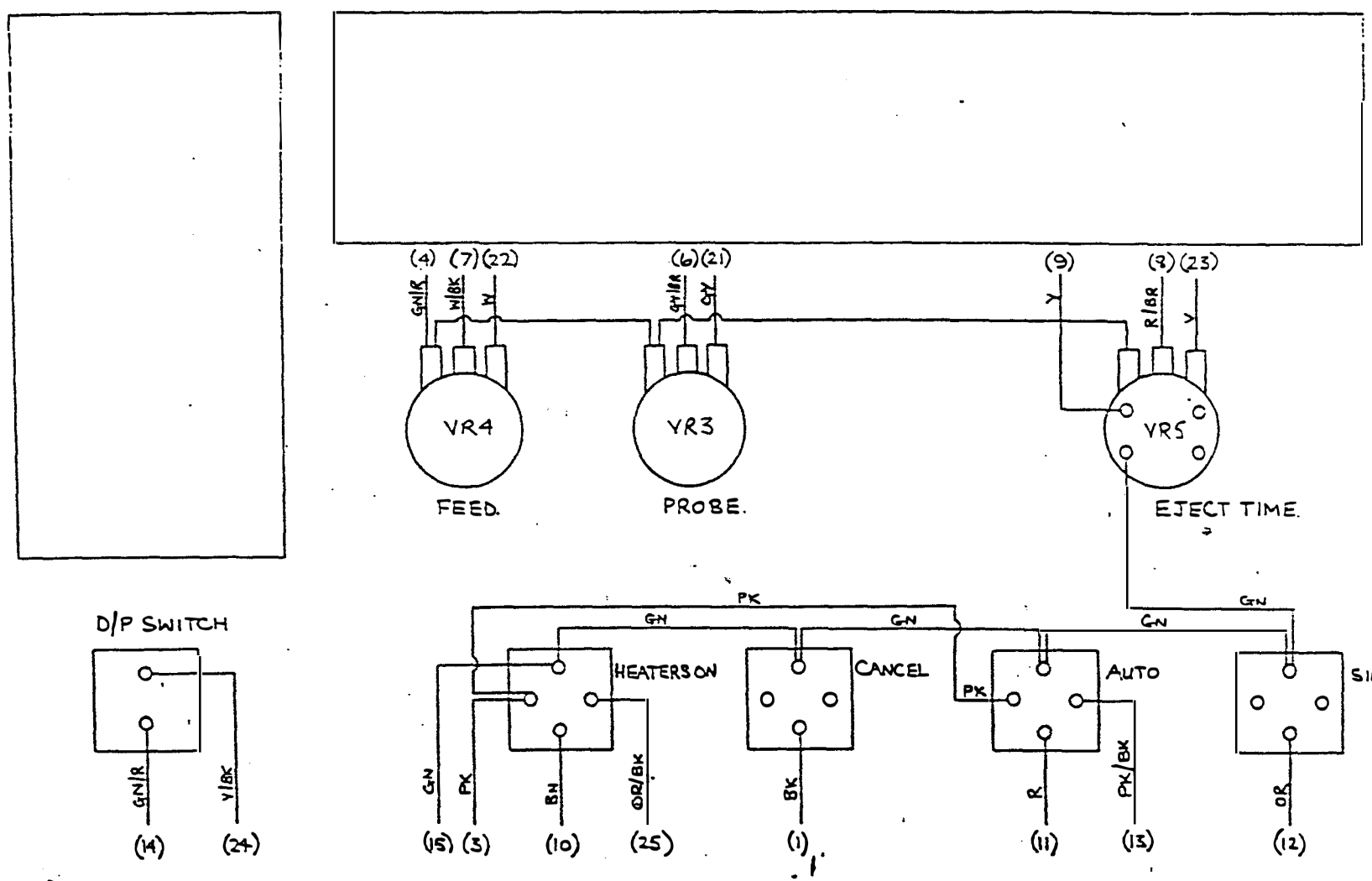

N.B. PIN NUMBERS IN ( ) REFER TO DB 25 ON MAIN P.C.B.

REVISION		INITIAL	DATE
C			
B			
A	MOD COLOURS ON 25&13	[illegible]	5-12-85

THIS DRAWING IS ISSUED ON CONDITION THAT IT SHALL NOT BE REPRODUCED OR COMMUNICATED TO ANY THIRD PARTY OR USED FOR PURPOSE OF MANUFACTURE WITHOUT THE WRITTEN AUTHORITY OF:- CHRUS REYNOLDS LTD REDDITCH ENGLAND

DRAWN AC

APPROVED

CHRUS REYNOLDS LTD.
TEL (0527) 27882
TELEX [illegible]

TITLE RABIT 2/3 CONTROLLER FRONT PANEL WIRING

DRAWING 11

NUMBER OF SHEETS

DATE OF ISSUE

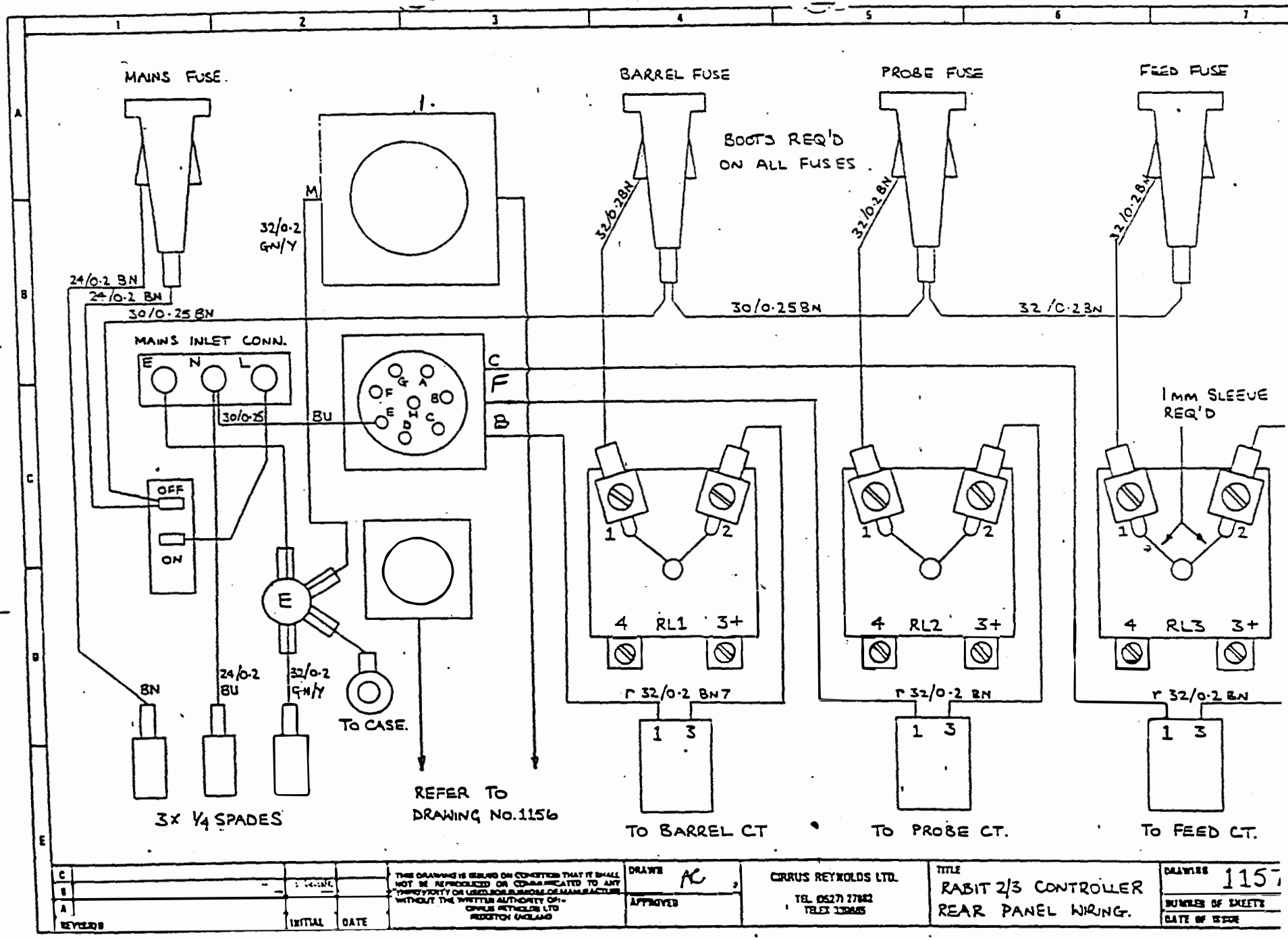
MAINS FUSE.
BARREL FUSE
PROBE FUSE
FEED FUSE
BOOTS REQ'D ON ALL FUSES
32/0·2 GN/Y
M
32/0·2 BN
24/0·2 BN
24/0·2 BN
30/0·25 BN
30/0·25 BN
32/0·2 BN
MAINS INLET CONN.
E N L
30/0·25
BU
C
F
B
1MM SLEEVE REQ'D
OFF
ON
E
1 2
4 RL1 3+
4 RL2 3+
4 RL3 3+
BN
24/0·2 BU
32/0·2 GN/Y
TO CASE.
r 32/0·2 BN
r 32/0·2 BN
r 32/0·2 BN
1 3
1 3
1 3
3x 1/4 SPADES
REFER TO DRAWING No.1156
TO BARREL CT
TO PROBE CT.
TO FEED CT.
REVISION
INITIAL
DATE
THIS DRAWING IS ISSUED ON CONDITION THAT IT SHALL NOT BE REPRODUCED OR COMMUNICATED TO ANY THIRD PARTY OR USED FOR PURPOSE OF MANUFACTURE WITHOUT THE WRITTEN AUTHORITY OF:- CIRRUS REYNOLDS LTD REDDITCH ENGLAND
DRAWN AC
APPROVED
CIRRUS REYNOLDS LTD.
TEL. (0527) 27882
TITLE
RABIT 2/3 CONTROLLER REAR PANEL WIRING.
DRAWING 1157
NUMBER OF SHEETS
DATE OF ISSUE

TIMING DIAGRAM
RABIT 2/3 SINGLE CYCLE

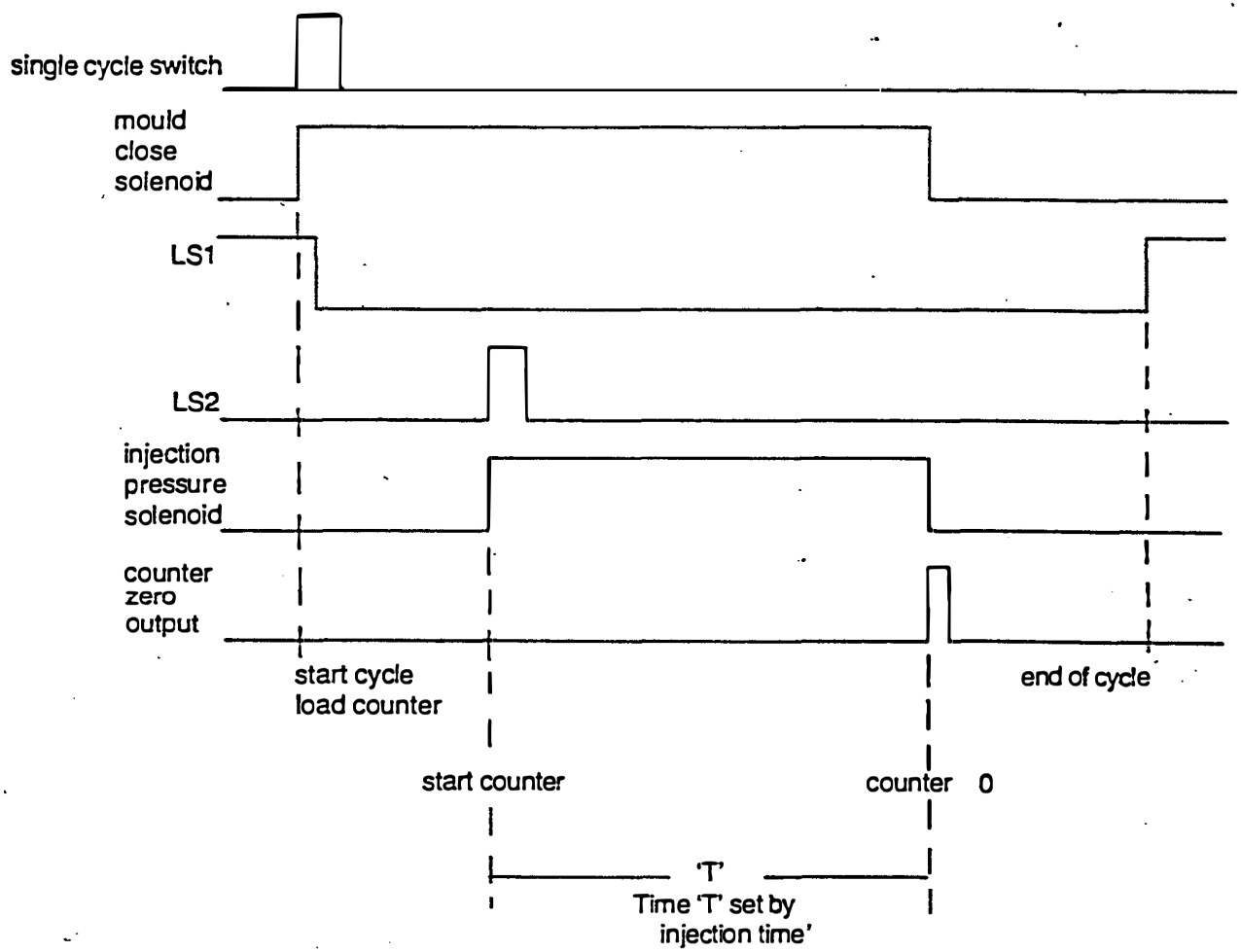

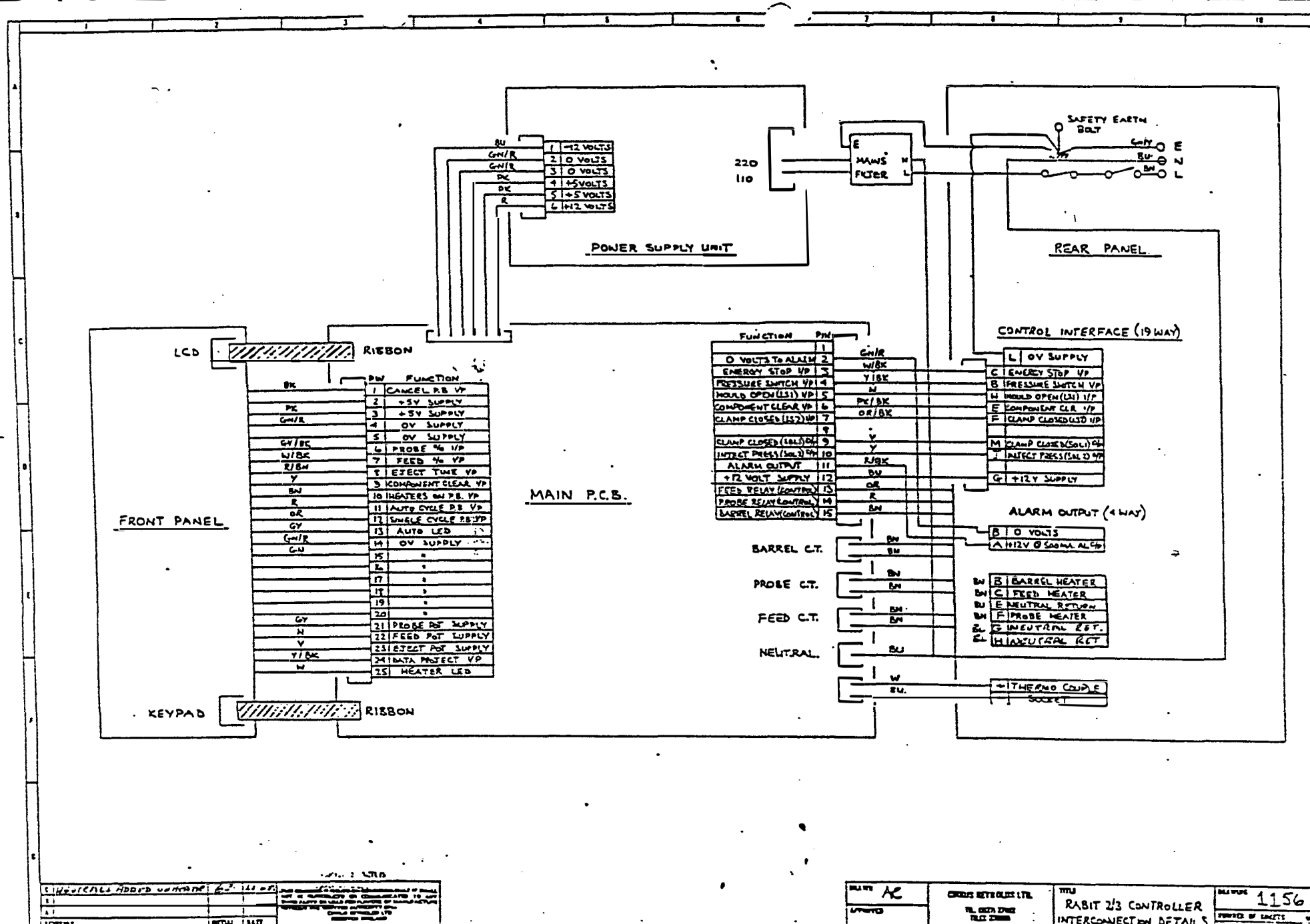

POWER SUPPLY UNIT
1 -12 VOLTS
2 0 VOLTS
3 0 VOLTS
4 +5 VOLTS
5 +5 VOLTS
6 +12 VOLTS
220
110
MAINS FILTER
SAFETY EARTH BOLT
E
N
L
REAR PANEL
LCD
RIBBON
FRONT PANEL
KEYPAD
RIBBON
PIN FUNCTION
1 CANCEL P.B VP
2 +5V SUPPLY
3 +5V SUPPLY
4 0V SUPPLY
5 0V SUPPLY
6 PROBE % I/P
7 FEED % VP
8 EJECT TIME VP
9 COMPONENT CLEAR VP
10 HEATERS ON P.B. VP
11 AUTO CYCLE P.B VP
12 SINGLE CYCLE P.B VP
13 AUTO LED
14 0V SUPPLY
21 PROBE POT SUPPLY
22 FEED POT SUPPLY
23 EJECT POT SUPPLY
24 DATA PROJECT VP
25 HEATER LED
MAIN P.C.B.
FUNCTION PIN
0 VOLTS TO ALARM 2
ENERGY STOP I/P 3
PRESSURE SWITCH I/P 4
HOULD OPEN (LS1) I/P 5
COMPONENT CLEAR I/P 6
CLAMP CLOSED (LS2) I/P 7
CLAMP CLOSED (SOL1) O/P 9
INJECT PRESS (SOL2) O/P 10
ALARM OUTPUT 11
+12 VOLT SUPPLY 12
FEED RELAY (CONTROL) 13
PROBE RELAY (CONTROL) 14
BARREL RELAY (CONTROL) 15
BARREL C.T.
PROBE C.T.
FEED C.T.
NEUTRAL
CONTROL INTERFACE (19 WAY)
L 0V SUPPLY
C ENERGY STOP I/P
B PRESSURE SWITCH I/P
H HOULD OPEN (LS1) I/P
E COMPONENT CLR I/P
F CLAMP CLOSED (LS2) I/P
M CLAMP CLOSED (SOL1) O/P
J INJECT PRESS (SOL2) O/P
G +12V SUPPLY
ALARM OUTPUT (4 WAY)
B 0 VOLTS
A +12V @ 500MA AL O/P
B BARREL HEATER
C FEED HEATER
E NEUTRAL RETURN
F PROBE HEATER
G NEUTRAL RET.
H NEUTRAL RET
THERMO COUPLE SOCKET
NEUTRALS ADDED UNDERTAKE
DRAWN AC
CHRIS KETHOLIS LTD.
TITLE RABIT 2/3 CONTROLLER INTERCONNECTION DETAILS
DRAWING 1156

RABIT 2/3 AIR CIRCUIT

DRAWING NUMBER 230

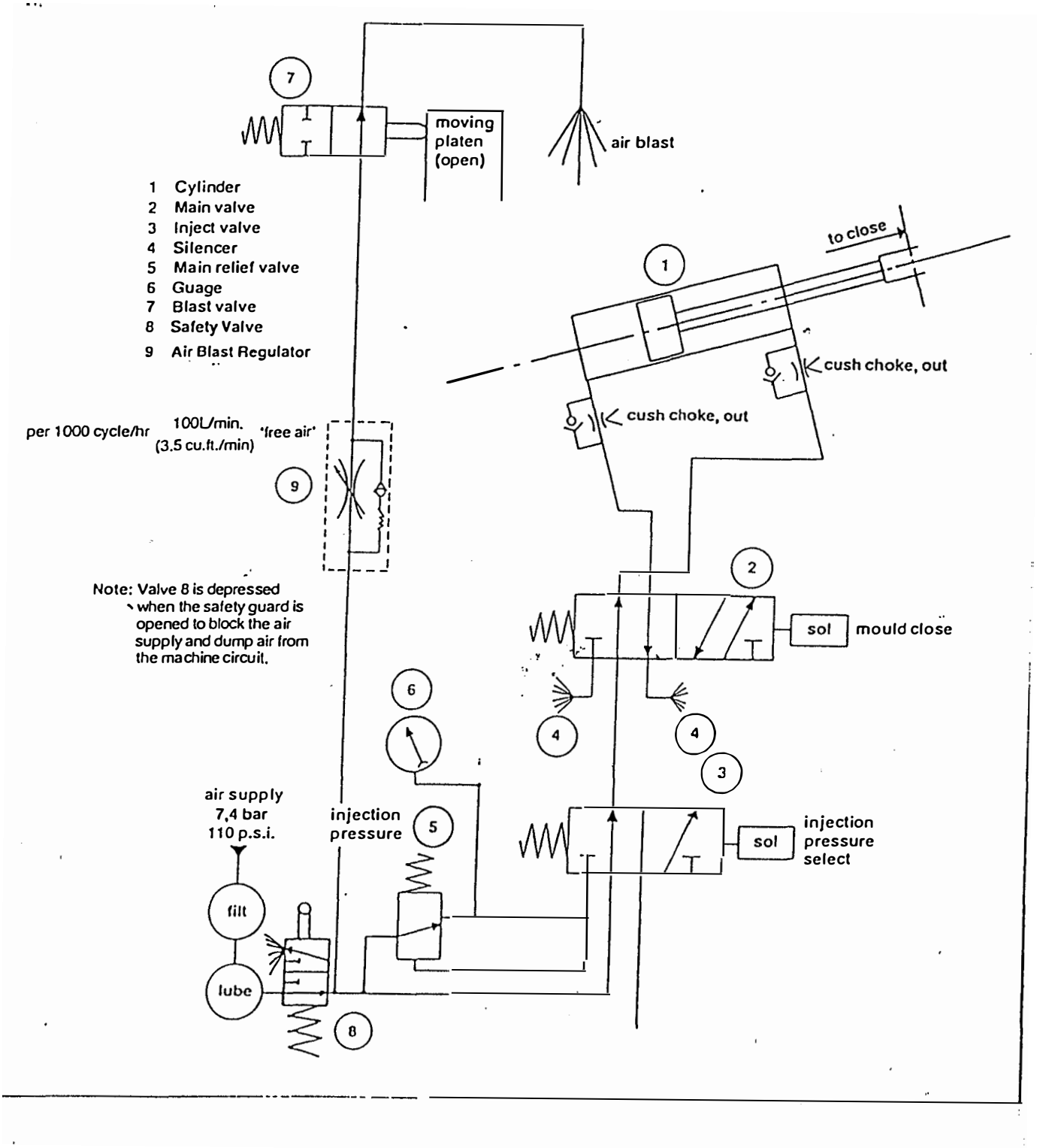

WIRING DIAGRAM RABIT 2/3 MOULDING MACHINE

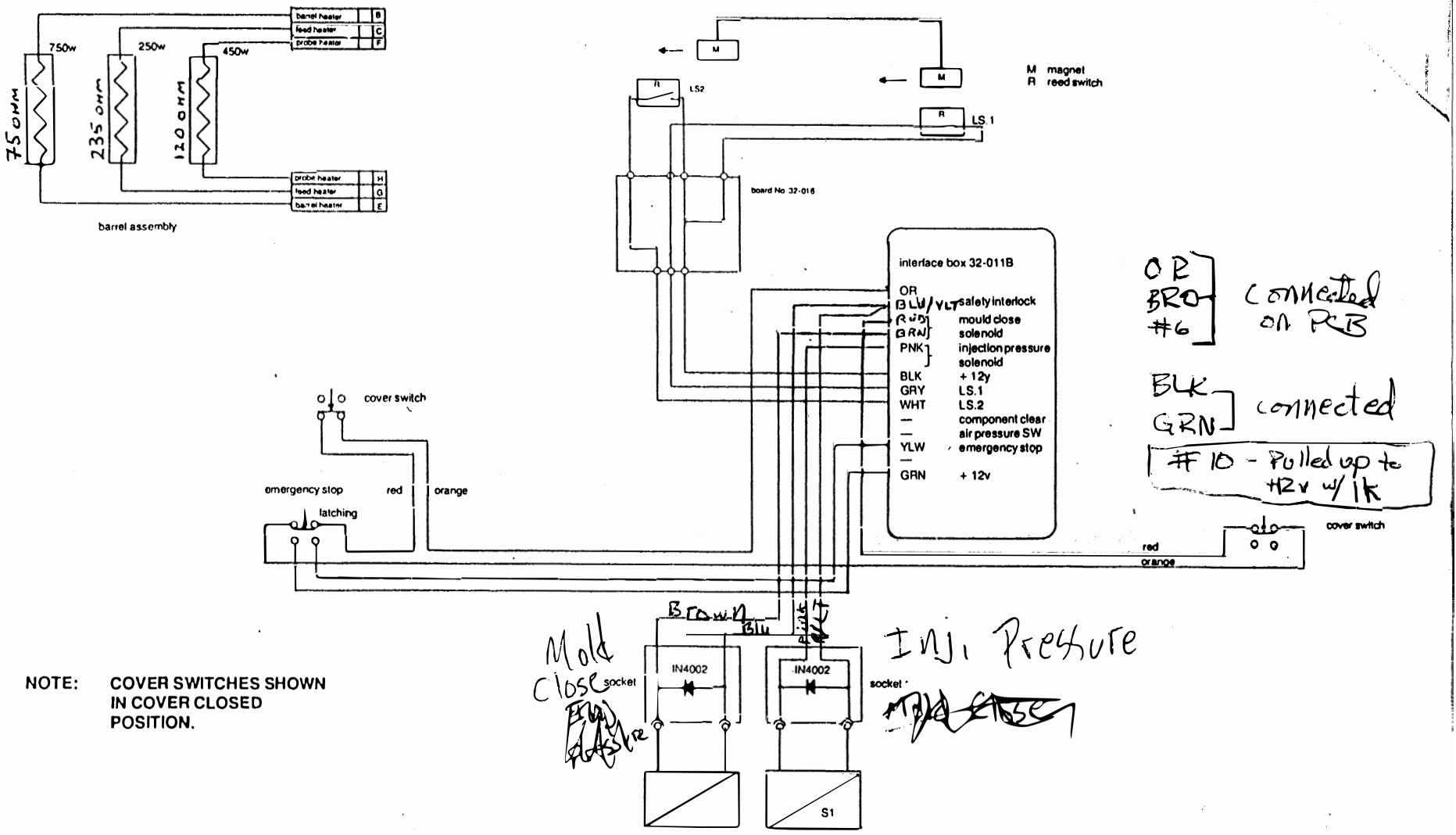

NOTE: COVER SWITCHES SHOWN IN COVER CLOSED POSITION.

WIRING DIAGRAM RABIT 2/3 MOULDING MACHINE

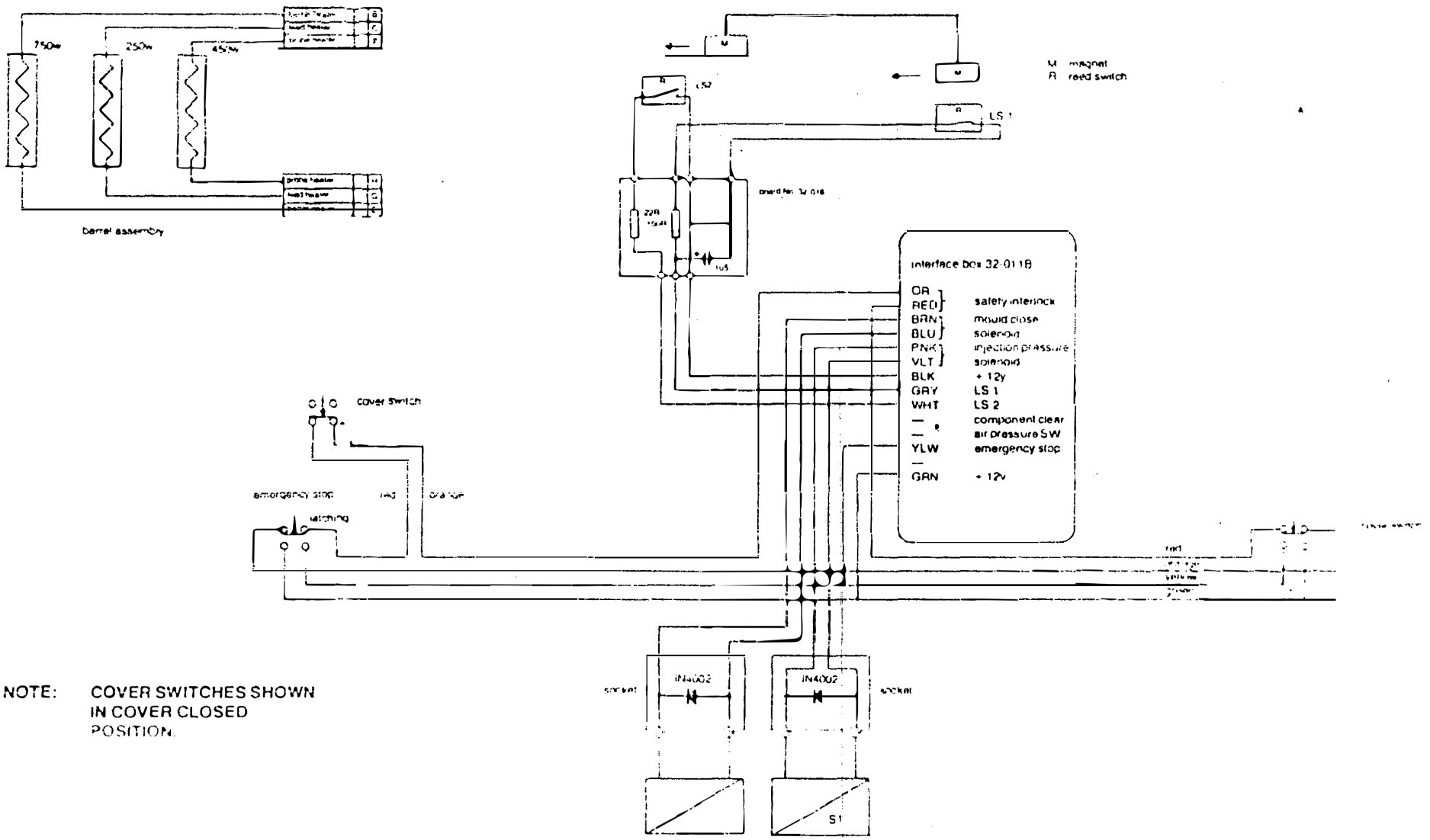

NOTE: COVER SWITCHES SHOWN IN COVER CLOSED POSITION.

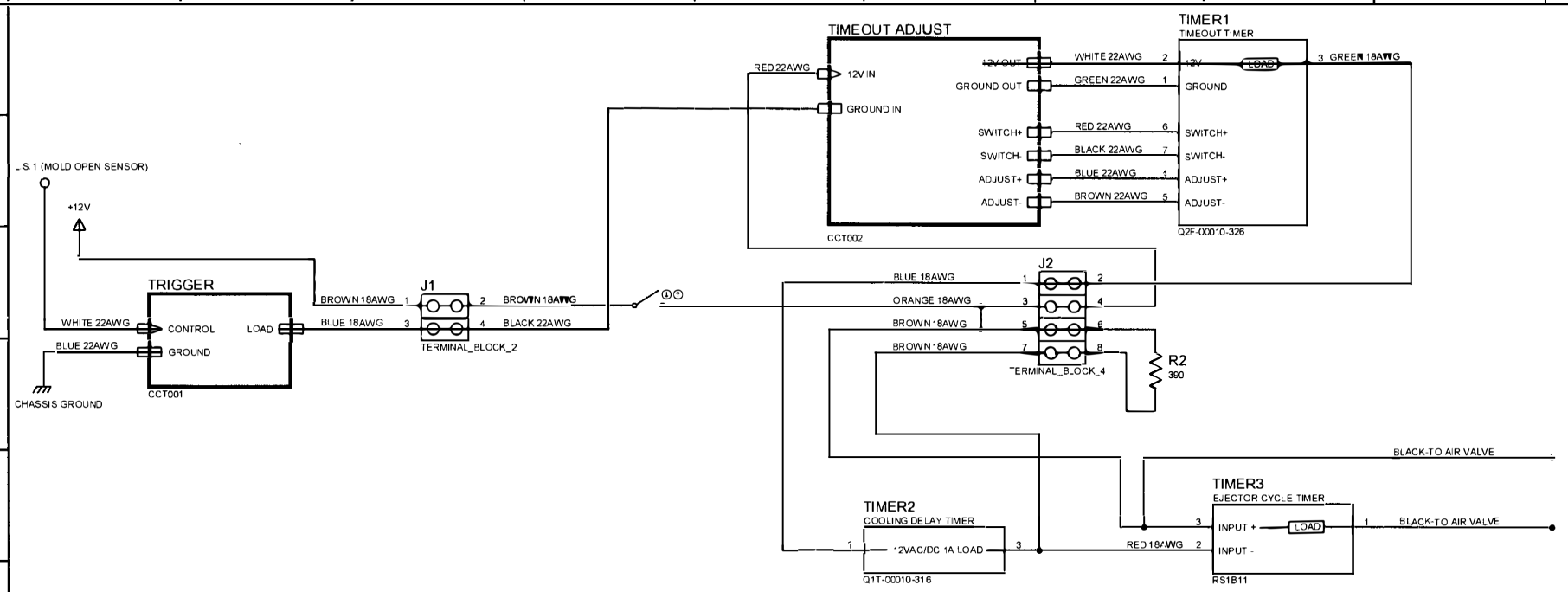

TRIGGER CIRCUIT

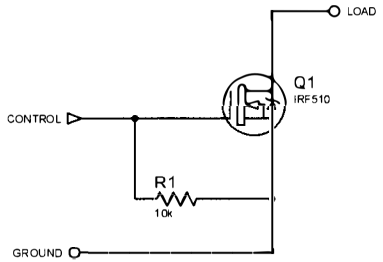

TIMEOUT ADJUST CIRCUIT

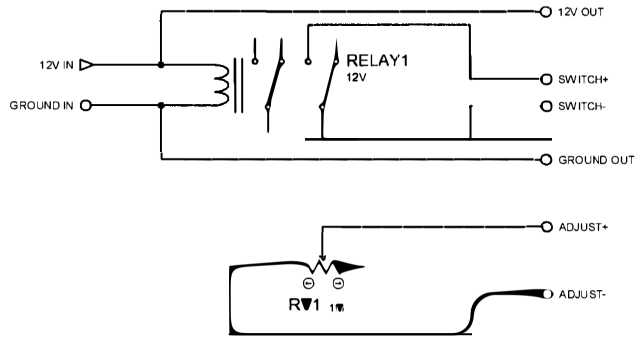

FILE NAME: Rabbit Ejector Controls.pdsprj	DATE: 11/21/2013
DESIGN TITLE: Rabbit Ejector Control	PAGE: 1 of 3
PAGE TITLE:	TIME: 4:33:13 PM
BY: Mark Robertson REV: -	

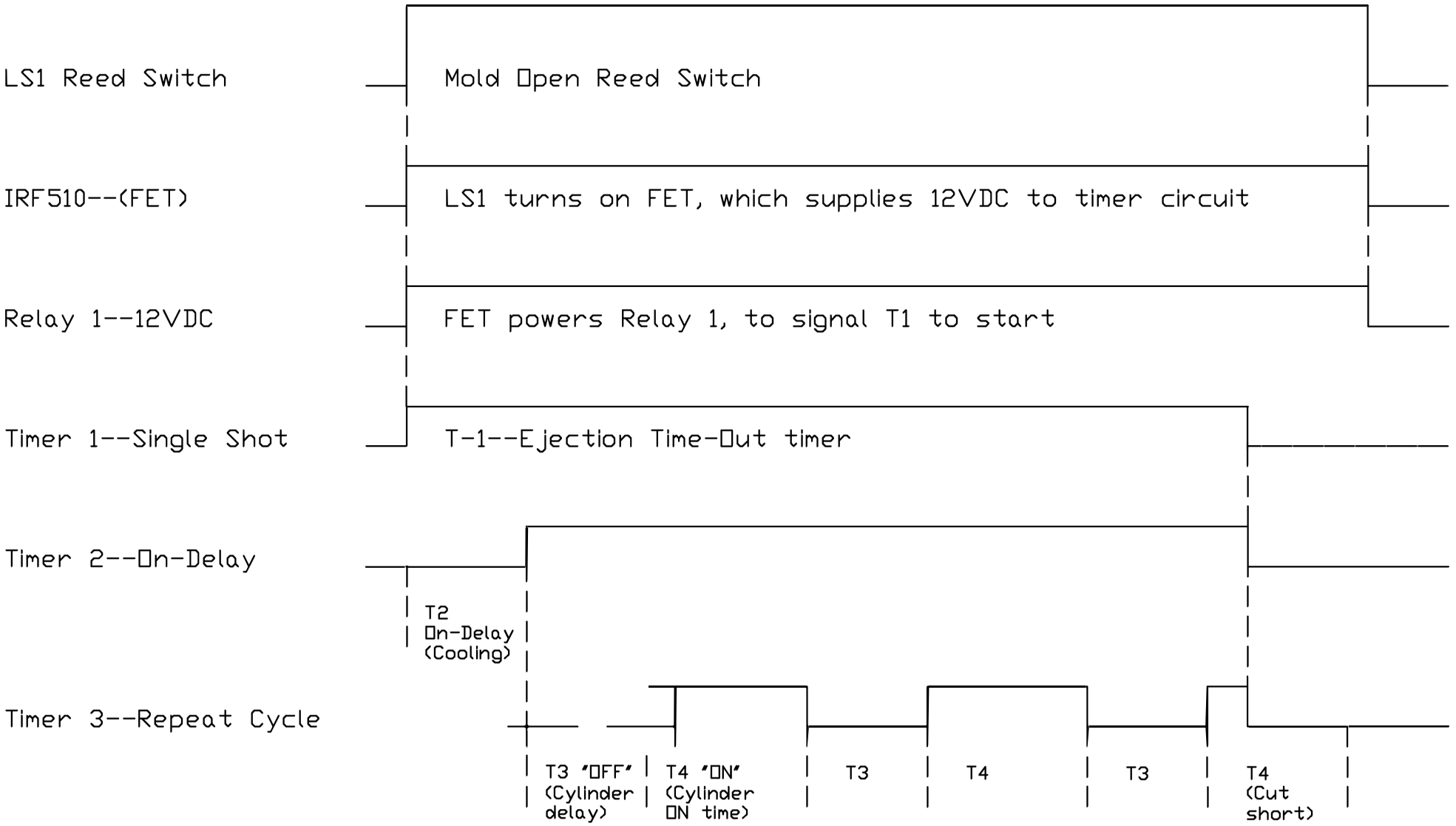
LS1 Reed Switch
Mold Open Reed Switch
IRF510--(FET)
LS1 turns on FET, which supplies 12VDC to timer circuit
Relay 1--12VDC
FET powers Relay 1, to signal T1 to start
Timer 1--Single Shot
T-1--Ejection Time-Out timer
Timer 2--On-Delay
T2
On-Delay
(Cooling)
Timer 3--Repeat Cycle
T3 "OFF"
(Cylinder
delay)
T4 "ON"
(Cylinder
ON time)
T3
T4
T3
T4
(Cut
short)

CAN IT BE MOLDED ON A RABIT MOLDING MACHINE?

The first item to consider on a component is the type of material. Refer to the material list for resins that have been processed. These resins are listed by levels of processability.

- o Level one are resins which are easy to process. The molding window is wide and are good for plunger type presses.

- o Level two materials are hydroscopic and must be dried well and also have an external lubricant to provide de-compression inside the injection unit. The machine setup for this level has been found to require a replaceable hot tip made from Ampco 945 and a spade thermocouple that provides better temperature control. The mold would require a hot pocket 75% of depth made from Ampco 945. If a fixed platten for the machine is used a heat transfer washer .118 thick will also help transfer the heat.

- o Level three materials are the same as level two except for a filler like glass. It has been found that the static design of the injection unit allows glass to settle out while running. At intervals during processing the injection unit will require dis-assembly and cleaning to maintain constant processability. This interval is very dependent upon glass content, type of resin, size of shot, resistance time of material in barrel. To minimize wear the injection unit internally needs to be coated with armoloy.

- o Level four materials require a special injection unit to process. Processing of this level is not recommended for first time users due to the limits and handling.

SHOT WEIGHT (2 GRAMS - 4 GRAM)

Rabit machines are sized by polystyrene at 100% density in plunger area. When determining if a part can run in a Rabit it is best to use 75% of rated shot size. It has been found that the largest shot size in 6/6 nylon unfilled in a 2 gram unit will produce a component weighing 1.3 grams max. It's safe if the part is 1 gram. When molding materials that are soft or low durometer reduce shot size by 1/2. The plunger will compress the material before moving it through the injection unit.

PHYSICAL SIZE

The Rabit machine is a 5 ton toggle clamp. To determine if sufficient clamp is available use 3 ton per square inch. The Rabit is a fixed opening stroke machine producing only 1.96" of daylight opened. Daylight can be increased by using slides, but it is not very practical or economical. It's always best to locate the component as close to center of the mold as possible so the clamp force is across the tie bars.

CYCLE TIMES

The Rabit 2/3 has a dry cycle time of 1.0 sec. Determining cycle time is a function of the type of material, amount of water temperature control in the mold, shot size (ability to plasticize resin between cycles), wall thickness and tolerance to be held. The poly family is generally slow cycling 10 to 18 sec. Nylons, acetals, polyesters like Valox cycle quicker 6-10 sec.

TYPE OF MOLD STYLE

The two styles of molds that have been used are rounds and platten. The round style work well on parts that do not require slides or core pulls. On a platten style mold the platten on the machine are designed as part of the total mold. This style 4 x 6 provide more area for slides, water cooling in slides and alignment of mold halves via the tie bars. This style should be considered also when a part will need to be a 3 plate design. When running level 2-3 and 4 materials the use of Ampco 945 in the hot tip area allows for better heat transfer and in most cases smaller gate holes when utilizing the direct inject concept noted for the Rabit molding machine. Due to the limited area around the mold and design of the press, unscrewing action in the molds is limited to the point that its not a good application for the press. A word of caution when looking at a component with length the daylight open of 1.96 inches limits the part length for ejection.

MATERIALS

Following is a list of materials (by level) most commonly used in the Rabit molding machine.

LEVEL 1

Polypropylene	Polyethylene
Polystyrene	ABS
Copolymer Acetal	Thermoplastic Rubber
EVA	Vinylidene Fluoride

Easy to process - good for learning the machine operation

LEVEL 2

Nylon 6-6/6-6/10-6/12
Thermoplastic Polyester (Valox)
Thermoplastic Elastomer (Hytrel)
Phenylene Oxide Ether (Noryl)

Must be dried well - external lubrication required, machine set up changes, all unfilled resin this level

LEVEL 3

Same as Level 2 except with filler i.e. Glass - TACL - Ferrite

LEVEL 4

Polycarbonate (Lexan 141)
Cellulose Acetate
Thermoplastic Polyester - Aromatic (LCP)

Requires special injection unit

Note: Flame retardants do not process well
Low durometer materials reduce shot size by 1/2
Regrind causes bridging problems
Large pellets do not feed well

The Cost Of Runners

The Expense Of The Long Distance Runner

Runners provide a means of supplying several cavities from the single entry sprue point within a plastic mould.

They are basically of two types:-

1. Hot (or insulated) which keep the material at or near it's required temprature within passages inside the mould so that only the material displaced from the runner, by injection of the shot at the 'sprue' point, is cooled.

   Hot runners are heated, insulated runners usually rely on speed of cycling and bulk of material within the passage.

2. Cold runners are moulded with the components and as such are part of the heat-input requirement cooling cycle and "shot cost".

Both these methods of supply of multi-cavities are expensive. (Hot Runner - HR./Cold Runner CR throughout the rest of the article) HR s can cost as much as £1000 per cavity over and above the cost of the rest of the mould and are very difficult to run on heat-sensitive materials and to colour-change. The cost of CR s is not so obvious and it is the purpose of this appraisal to evaluate this cost.

Cost of Runner Recycling

For the purposes of this calculation let us assume a machine of say 15 Tons clamp 45 grammes shot which has to be used to run 1 gramme parts in for example Acetal or nylon. A six impression mould is possible as this gives an acceptable mould size and we'll assume the accuracy required for the component permits this number - accuracy in the order of ± 0.0005"/inch are not possible on a multi cavity CR (and the chosen materials preclude HR.)

Runner form may be trapezoidal; C.S.A. say 8mm x 5mm; length 280mm; sprue 5mmø x 40mm long.

So total weight of runner system	=	11.2 grammes.
weight of 6 components	=	6 grammes
Total Shot		17.2 grammes

Cost areas are as follows:-

1. Heat input Power requirment wether a result of driving a plasticising screw, use of band heaters or a combination of both are divided 65% runner material 35% mouldings ie. 85% increase in the power needed for mouldings alone.

Con/td.....

2. Cooling The water flow chiller cooling tower etc will require to be 85% larger capacity for the multi-cavity mould.

3. Cycle time Typical required cycle times for a moulding of 1 gramme and average section in Acetal is 3 seconds and in Nylon 2 seconds (plus mould open and close time) a runner of 8 x5mm section has a cooling time up to the earliest point at which it can be ejected reliably of approxiamately 7 seconds in Acetal and 5 seconds in Nylon. This adds 133% to the minimum necessary cycle for Acetal and 150% to that for nylon.

4. Material cost There is obviously an 85% increase in material cost per shot and in many cases this cannot be redeemed by regrinding and re-use because the heat history of the material and it's volume relative to the shot precludes re heating without loss of mechanical properties. Let us assume that 'regrinding' is permissable.

5. Regrinding The runner system requires seperation, transport in a clean bag, collection and storage until sufficient is available to justify regrinding and then storage mixing with virgin material and pre-drying.

   On the basis of the Nylon component the throughput of re-usable material is £.7Kg per hour. This probably represents 10/mins/hour for collection and bagging. Allow 1 material bag/hour as storage medium and, as the regrinding machine probably requires to handle various materials say 8 to 10 bags/day shift. Regrinding would take approximately 1 hour for the 50kg or so collected (@say £5/hour).

   Further storage, drying, mixing in handling time above would take 1 hour per 50kg.

Featured on the MCP stand at Interplas were three RABIT 2/3 injection moulding machines. These are the smallest fully automatic machines in the world and the original design is based upon the premise of matching machine size to the type of mouldings which give so many problems in production. These problems are mainly due to incompatability of the sizes of the part and the machine giving excessive 'waste' sprue and runner, inaccuracy in multi-cavity parts and excessive 'dwell' time of heat-sensitive materials in large machines. Most moulders are familiar with this situation:-

The typical mould may feature 4 parts of I gramme each, producing a total shot with runner of 9 gramme, cycle time of I2 secs is based upon the cooling time for the runner not the part and 5 gramme of Acetyl, Nylon or other expensive material has to be reground.

The machines 2 gramme shot weight and fast cycle were demonstrated on polyethylene and polystyrene at the NEC but with recent development changes in control layout and 'hot tip gate' shape, the MCP RABIT has a remarkable material handling capability so that the full potential of the machine can be realised on engineering materials.

An Acetyl gear wheel is being produced in a single cavity mould at a cycling rate of 4 secs without sprue, without scrap and without any manual condition corrections to an accuracy of $\pm$ .OI mm (.00035") this is 0.05% variation from nominal diameter and well within the requirements for the part.

This accuracy from a pneumatic machine is, we believe, a very remarkable achievement and is principally due to the heating chamber design and temperature control. Briefly, the chamber offers a large heating surface area with a small columetric capacity which is fed from a controlled conditioning zone. Molten material flows to the seperately controlled probe which holds the melt at a stable temperature for injection via the hot gate into the cavity.

The surface area/volume ratio is important in providing homogenous melt which is only a few degrees below the set temperature of the plasticising surfaces. It surely makes sense to use a machine the size of which is appropriate to the component. It must be accepted that;

I) In most instances where the runner section is heavier than that of the component time will be wasted on cooling

2) Accuracy is adversely affected by the number of cavities

3) Runner size is frequently increased to improve accuracy of multi-cavity parts

4) Hot runner moulds are not always applicable to Engineering Materials and are expensive

5) The small weight of the shot, even with heavy runner systems, is frequently a cause of material degradation in relatively large machines.

The MCP RABIT 2/3 offers an attractive alternative in the production of small parts in engineering and 'ordinary' materials.

SMALL CAN BE PROFITABLE

How do you injection mould parts weighing 2 grammes or less in Engineering materials? Multi-impression on a 'small' machine usually means producing a 3 or 4 to 1 ratio of slow-cooling runner to faster-cooling components. (Work out how much regrinding and storage costs you) If your market is such that you can contemplate a hot-runner mould your problems are related to decomposition of the Acetal, Nylon, Polycarb etc., and the maintenance of a sophisticated mould and control system,

The use of a very small machine is not usually contemplated as up until now the range has 'bottomed out' at 10-15 grammes, the design of the heating chamber is archaic and most have no means of producing sprueless mouldings as either single impressions or economically fed multi-impressions. So, why not consider a machine small enough, fast enough and with the degree of sophistication necessary to produce accurate parts free of sprue and runner on an economic basis?

The recently introduced RABIT 2/3 is the answer to the problems presented by these components.

The use of a plunger heating chamber instead of a screw is based upon a carefully considered technical and cost appraisal of the basic requirements of the mouldings and materials to be handled. Modern materials are far more tolerant of thermal abuse than they were when plunger units were the general rule, not the exception, in machine design. Nevertheless, there is no excuse for crude and slavish copying of design criteria of 25 years ago.

The RABIT has a very special heating chamber which has the following novel features :-

1. Large heated surface area in contact with the plastic material.
2. Small internal volume.
3. Internally heated spreader which also provides a 'hot-runner' type of feed into the mould.
4. Very low resistance to incoming granular material flow.
5. Sophisticated 3 zone control of temperature.

Consequently the machine will run Acetal (Hostaform, Delrin, Kemetal) Nylon, (66, Nylatron, Zytel ST and G.R. grades up to 30%) Polycarbonate, P.T.F.E. etc., with a good temperature tolerance and extremely consistant material condition.

The use of a screw plasticising unit is not thought necessary or desirable on such a small machine as if a screw was used to produce either single impression sprueless or 'multi-impression minimum-sprue' mouldings the control of the heated nozzle or runner, which could hold as many as 10 'shots', would require very elaborate control if the beneficial effects of Screw Plasticising was not to be negated by a poor 'holding' environment.

The RABIT system of plasticising has this performance on Acetal :-

(a) Good quality homogenous material at 190°C for a setting of 195°C.

(b) A 15 minute plus 'hold' capability without switching off heat or degradation of material within the chamber.

(c) A 'shut-down and restart' capability without purging or material change.

(d) Direct injection into a component without grate 'drool'.

(e) Very good maintenance of dimensions over a long fully-automatic run e.g. ± .01mm (.0003") on a 19mm o/d gear wheel which weighs .4 gramme and cycles at 3.5 to 4 seconds.

The machine is compact, bench mounted and air powered. It requires no lubrication, a little water and it's printed-circuit 5 VDC control unit is supplied from a 13 amp 240v single phase socket.

Moulds are 80mm diameter and 65mm thick, they locate accurately into the fixed platen and a mould change, typically, takes 5 minutes. Mould prices are from £300 for a simple, circular stripper plate unit to nearly £2000 for a more complex component requiring sparked cavity (ies) in a split or cored mould.

Cycle times are possible which are related to the cooling rate of the maximum section of the part only and not dependant upon the usually far heavier runner system. A cycle of 2 seconds has been maintained on a Nylon part and, because of the unique hot feed system available on the RABIT even with a small runner feeding a 2 impression component a cycle of 2.2 seconds has been possible without difficulty; 3200 parts per hour!

This machine, which is covered by World Patents, is now proving it's ability to provide a fast, reliable supply of accurate, clean components from a relatively low cost compact 'package'.

TABLE 1.

The figures given are not absolute as "thin section" can only be an arbitrary statement but the general guide shows how the shot weight varies according to the type of component.

A "heavy" sec may be considered as 2mm plus.

Thin section 1mm or less

Long f ow length is 25mm plus from feed whether direct or pingate.

Runner should be as short as possible.

Where gates are small their length must be as short as possible.

1. Heavy section direct feed from nozzle.
2. Heavy section - runner and pin gate
3. Heavy section fed through thin section
4. Long flow heavy section
5. Long flow thin section
6. Thin section direct or pin gate.
7. Thin section fed from heavy section.

Material	1	2	3	4	5	6	7	Plunger ∅
Polyethylene LD	2	1.7	1.7	1.7	1.3	1.4	1.3	15
Polyethylene HD	2	1.7	1.7	1.7	1.3	1.4	1.3	15
Polypropylene	2	1.6	1.5	1.4	1.1	1.2	1.1	15
Polyurethane	2	1.8	1.8	1.8	1.6	1.8	1.6	15
Styrene GP	2	1.7	1.7	1.6	1.5	1.6	1.6	15
Styrene H.1	2	1.6	1.5	1.4	1.3	1.4	1.4	15
A.B.S.	2	1.5	1.4	1.3	1.1	1.3	1.3	15-12
Nylon	2.1	2.2	2.2	2.2	2.1	2.2	2.1	15
Nylon + Glass Fibre	1.8	1.6	1.5	1.3	1.2	1.1	1.1	12-10
Nylatron	2.3	2.3	2.3	2.2	2.1	2.2.	2.2	15
Acetal	2.2	2	1.8	1.5	1.2	1.2	1.6	15
Acrylic	1.5	1.4	1.3	1.3	1.0	1.0	1.3	12-10
Acrylic Polymer	1.6	1.5	1.4	1.4	1.1	1.1	1.4	12
Polycarbonate	1.7	1.3	1.2	1.1	.9	.8	1.1	12-10
P.V.C.Soft	1.8	1.7	1.7	1.7	1.5	1.6	1.7	15
P.V.C. Hard *	1.3	1.2	1.1	1.0	.9	.8	1.0	12

* Unplasticised not suitable.

The RAM is a plunger machine, there is not therefore an absolute volume of material displaced each stroke as in a screw machine. This is because the screw machine deals with (injects) a volume of molten dense material which is pushed directly by the shut-off or non-return valve on the front of the screw. Area of screw end x stroke = volume.

On a plunger machine there are a number of factors which affect the actual amount injected in relationship to the area and stroke of the plunger :-

1. Hardness and size of granule.
   Hard granules; Styrene, Nylon, Polycarbonate, Acrylic, Acetal etc., compress very little in the feed and so transmit plunger movement well. Large granules will drop into the feed with wide air spaces between them and so, if soft, will compress easily to reduce shot volume.
2. The shape of the granules.
   Spherical form is preferred as it more readily flows into the space left by the retracted plunger. Cylindrical granules do not flow well but are acceptable unless they are very large. 'Powder' such as 'Diakon" polymer gives the best possible feed volume; reground material reduces the shot volume drastically and may not even pass down the feed throat.
3. Flow stiffness of material.
   A very 'stiff' material will resist flow and may not permit full shot weight to be achieved.
4. Wall section of moulding
   Thin sections are more difficult to fill and may freeze off only partially filled and well below shot capacity.
5. Compressibility of molton material
   As the pressure rises within the mould and, therefore within the barrel, the material compresses and so the effect is to reduce the transmission of imput volume to output. The contents of the barrel, although small, are some 30 times greater in volume than the maximum shot weight so that 2% compression is a significant figure.
6. Flow-back in the feed
   As the plunger retracts after injection the induced compression within the barrel expands to cause the most recently introduced plastics to follow the plunger back for some distance. This reduces the volume available for the next charge of granules and can be responsible for some loss of shot capacity. Flow back can be reduced by keeping the feed zone colder than

Comparison of 6 imps. 1 gramme part in Nylon with 1 & 2 imps RABIT m/c

ITEM	6 imps.			1		2	
	Cost/hr		Notes	£		£	
Mould (8hrsx5 Daysx48wksx5yrs)	£2,500	£0.26	-	£500	£0.05	£700	£0.07
Machine (" " " ")	£7,500	£0.78	-	£3,900	£0.40	£3,900	£0.40
Power for material plasticisation	5.16w/h	£0.30	@6p/kwh	.3kw/hr	£0.01	.6kw/hr	£0.03
Power for running m/c total	8 kw/hr	£0.48	All power inc	2kw/hr	£0.12	2.3w/hr	£0.14
Cooling Time	5 secs.		-	2 secs.		2 secs.	
Cycle time	7 secs.		-	3 secs.		3 secs.	
Collection of waste runners	10min/hr	£0.83	@£5/hr	0		0	
Storage of waste runners	4 cuft/hr	-	-	0		0	
Regrinding of waste runners	7/mins/hr	£0.58	-	0		0	
Mixing	3/mins/hr	£0.25	-	0		0	
Drying	4/mins/hr	£0.33	-	0		0	
Total Cost Per Hour		£3.81			£0.59		£0.64
Parts per hour	3085			1200		2400	
Cost per 100 parts (of handling-and moulding)		£0.12	Does not include material in part		£0.05		£0.026

8.1. PARTS LIST MCP RABIT 2/3

Description	Part No.
Hopper Assy	32-037A
Scotch Bar Assy	32-036A
Fixed Platen Assy	32-035A
Heater Chamber/Spreader	32-034A
Barrel Heater Assy	32-206A 39.06
Feed Heater Assy	32-207A
Cartridge Heater Assy	32-208A
Heater Cable Connector Shell	EP 4034
Heater Cable Connector Cover	EP 4035
Main Casting	32-137
Bush	MBP 004
Anti-Vibration Mounting	MMG 014
1/8″BSPT - 8 O/D Tube Stud Elbow	MPF 023
1/4″BSPT Pressure Plug	FBK 066
Heater Plug Bracket	32-164
Main Pin	32-130
Nylon Washer (special)	FW 3038
1/4″BSPT Pressure Plug (for pins)	FBK 047
Tie Bar	32-151
Ejector Stud	32-152
Main Cam Roller Assy	32-209A
Small Pin	A32-126
Cytan Cylinder	32-157
Rear Clevis	32-132
Arm Pin	32-133
Cylinder Arm	32-129
Bush for Cylinder Arm	MBP 006
3/8″BSPT Male - 1/4″BSPT Female Red. Bush	MPF007
1/4″BSPT - 1/4″BSP Elbow 8mm O/D	MPF 008
Slide Carriage	32-124
Injection Fork	32-127
Short Toggle	32-125
Pin	32-123
Spring Pin	FP 1006
Injection Fork Pivot	32-153
Cam Follower	MBB 010
Main Cam	32-121
Thrust Plate	32-120
Rod End	32-128
Toggle	32-122
Pin	32-123
Base Frame	32-154
1/8″BSP Male - 1/8″BSP Female Valve	MPF 028
1/8″BSP x 8 O/D Tube Stud Adaptor	MPF 030
End Cover	32-162
1/8″BSP - 1/4″Female/Male Adaptor	MPF 015
1/8″BSP - 1/8″BSP Elbow	MPF 016
1/4″BSP Silencer	MPF 019
1/4″BSP x 9 O/D Tube Stud Black Elbow	MPF 024
3/2 Roller Valve (modified)	32-167
Stop Switch Operating Knob Assy	ES-4026
Cover Limit SW (roller)	ESB 002
Pressure Regulator and Gauge	MPF 005
Gauge Mounting	32-166
4mm Equal Bulk Head	MPF 025
8 O/D Tube Equal Tee	MPF 009A
1 5/8″ Snap Bush	WG1013
5 Way Valve	MPF 001
3 Way Valve	MPF 002
1/4″BSPT 1/4″BSPT Bulkhead Fitting	MPF 014
1/4″Female to 3/8″Female Reducer	MPF 012
Silencer	MPF 013
Guard Assy	32-021A
RABIT 2/3 Switch Loom	32-017A
Non Contact SW. P.C.B. Assy MkII	32-026A
RABIT 2/3 Interface Cable	32-014A
RABIT 2/3 Heater Interconnection Cable	32-013A
Interface Box MkIII Assy	32-022A
Base Frame	32-154
Earth Strap (main frame to base frame)	32-114
Earth Lead (to control box)	32-018A
Magnetic Actuator	ESA 002
Cotter	32-144
Heat Shield	32-163
Earth Strap (barrel to main frame)	32-113
Plunger Retaining Clip	32-173
12mm Plunger/Sleeve	32-140/141
15mm Plunger/Sleeve	32-142/143
10mm Plunger/Sleeve	32-145/146
Thermocouple	ELM 017
Bayonet Adaptor (T/C)	ELM 006
Moving Platen	32-149
Ejector Plate	32-150
Mini Poppet Valve	MPF 004
Side Panel (Screended)	32-169
Side Panel (Un-screened)	32-168
1/4″BSPT Female Threaded Swivel Coupling 3/8″	MPF 018 McMASTER CARR #
1/4″BSPT Female Threaded Swivel Coupling 5/16″	MPF 017 51495K223
Control Box	32-010A
Microprocessor Control Unit	ELM 018
Mould Clear Unit Assy	32-025A
Audible Alarm	ELM 010
Xenon Beacon	ELM 011
7A Ultra Fast Fuse	EF 1008

TUMKEN

2 HEATER CONNECTORS
SHELL ~~[illegible]~~ 14.96
36.37

2 FEED HEATERS 52.85
1 PROBE HEATER 56.93
1 AUDIBLE ALARM $84.45

DAVE ABERCROMBIE

12/11/98